12

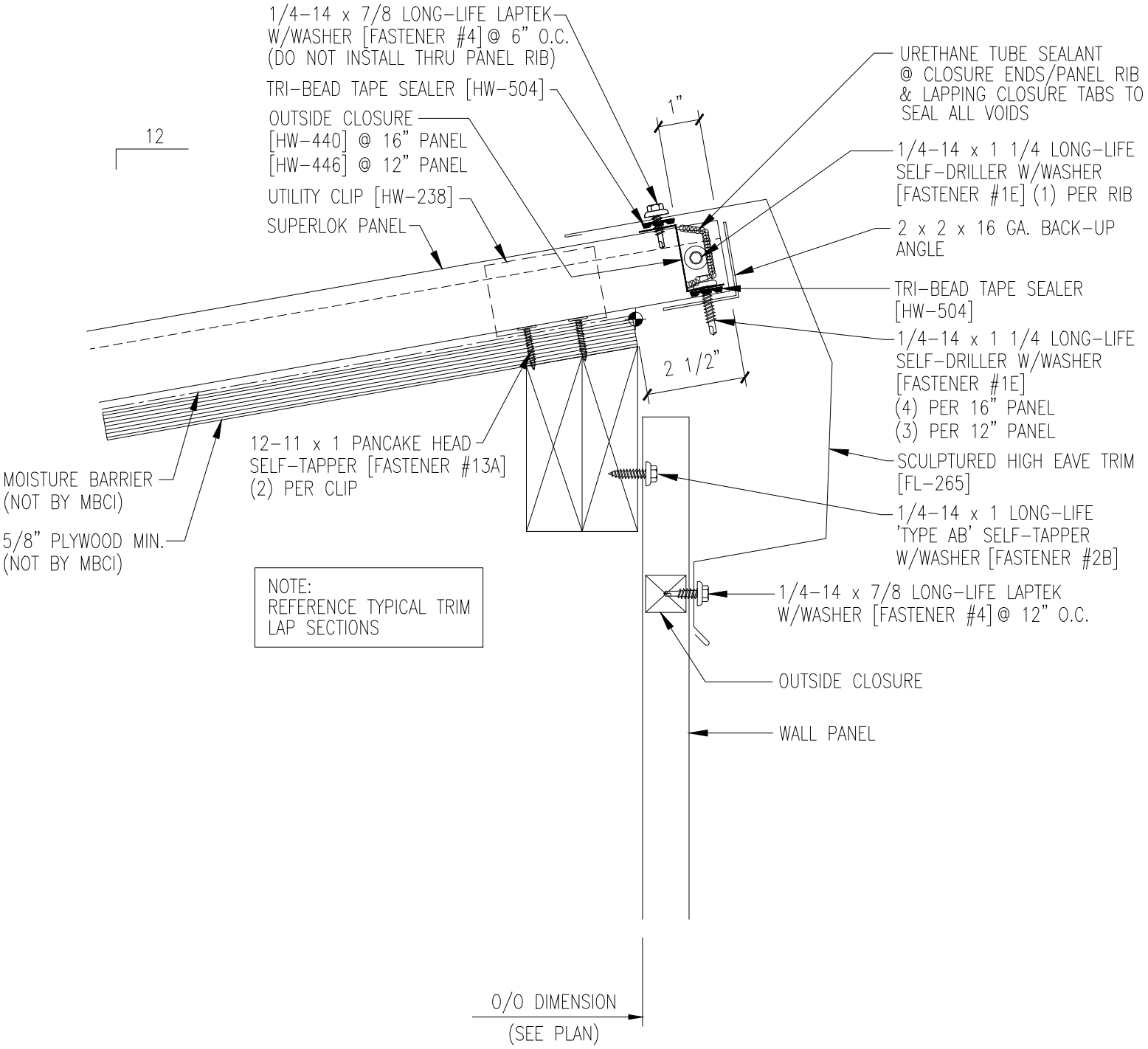
1/4-14 x 7/8 LONG-LIFE LAPTEK W/WASHER [FASTENER #4] @ 6" O.C. (DO NOT INSTALL THRU PANEL RIB)
TRI-BEAD TAPE SEALER [HW-504]
OUTSIDE CLOSURE [HW-440] @ 16" PANEL [HW-446] @ 12" PANEL
UTILITY CLIP [HW-238]
SUPERLOK PANEL
1"
URETHANE TUBE SEALANT @ CLOSURE ENDS/PANEL RIB & LAPPING CLOSURE TABS TO SEAL ALL VOIDS
1/4-14 x 1 1/4 LONG-LIFE SELF-DRILLER W/WASHER [FASTENER #1E] (1) PER RIB
2 x 2 x 16 GA. BACK-UP ANGLE
TRI-BEAD TAPE SEALER [HW-504]
1/4-14 x 1 1/4 LONG-LIFE SELF-DRILLER W/WASHER [FASTENER #1E] (4) PER 16" PANEL (3) PER 12" PANEL
2 1/2"
12-11 x 1 PANCAKE HEAD SELF-TAPPER [FASTENER #13A] (2) PER CLIP
SCULPTURED HIGH EAVE TRIM [FL-265]
MOISTURE BARRIER (NOT BY MBCI)
5/8" PLYWOOD MIN. (NOT BY MBCI)
1/4-14 x 1 LONG-LIFE 'TYPE AB' SELF-TAPPER W/WASHER [FASTENER #2B]
NOTE: REFERENCE TYPICAL TRIM LAP SECTIONS
1/4-14 x 7/8 LONG-LIFE LAPTEK W/WASHER [FASTENER #4] @ 12" O.C.
OUTSIDE CLOSURE
WALL PANEL
O/O DIMENSION
(SEE PLAN)