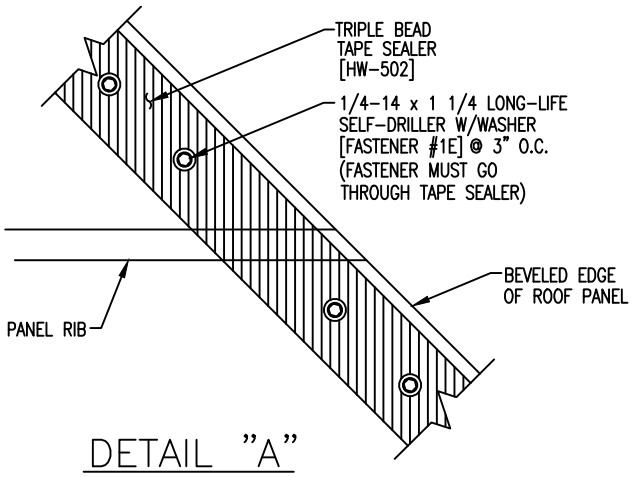

DETAIL "A"

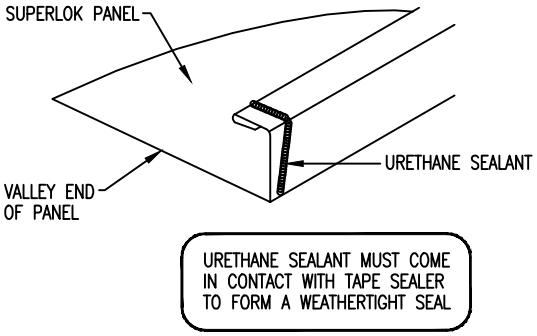

DETAIL A

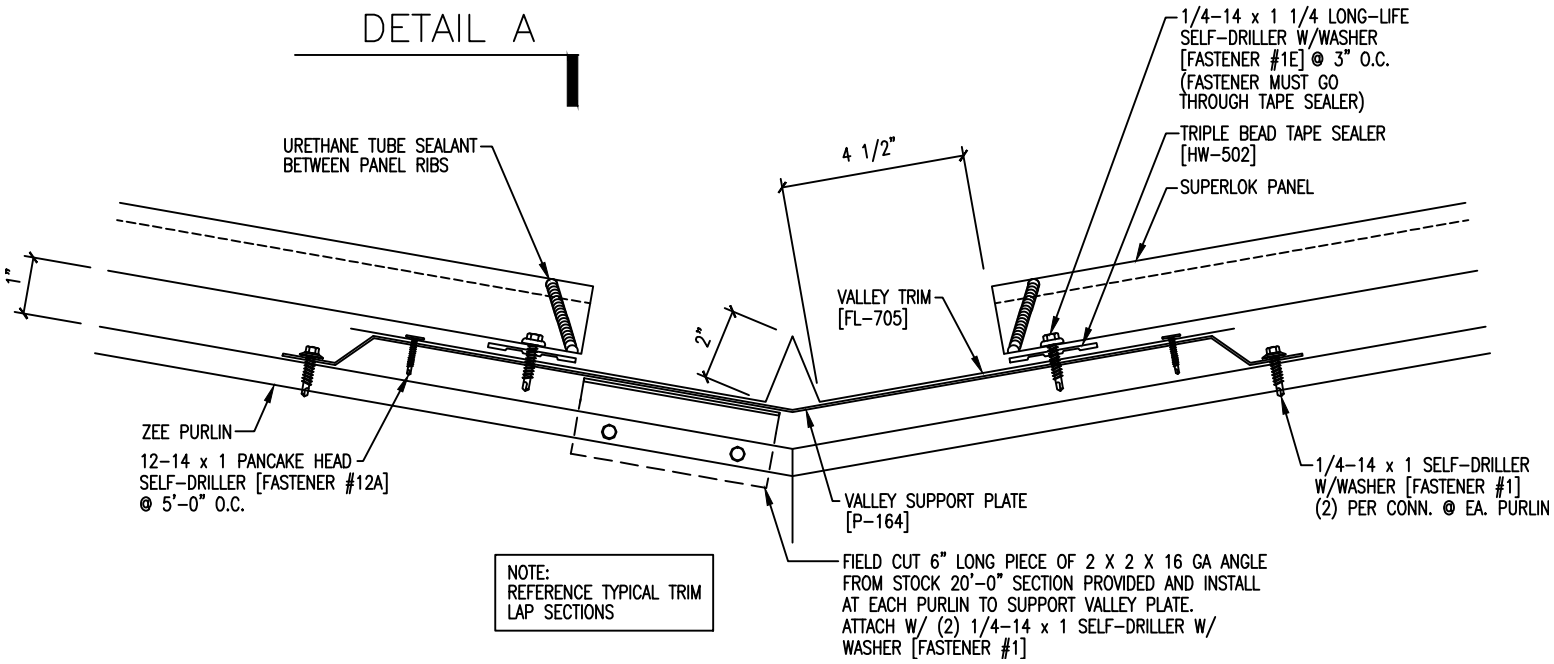

NOTE:
REFERENCE TYPICAL TRIM
LAP SECTIONS