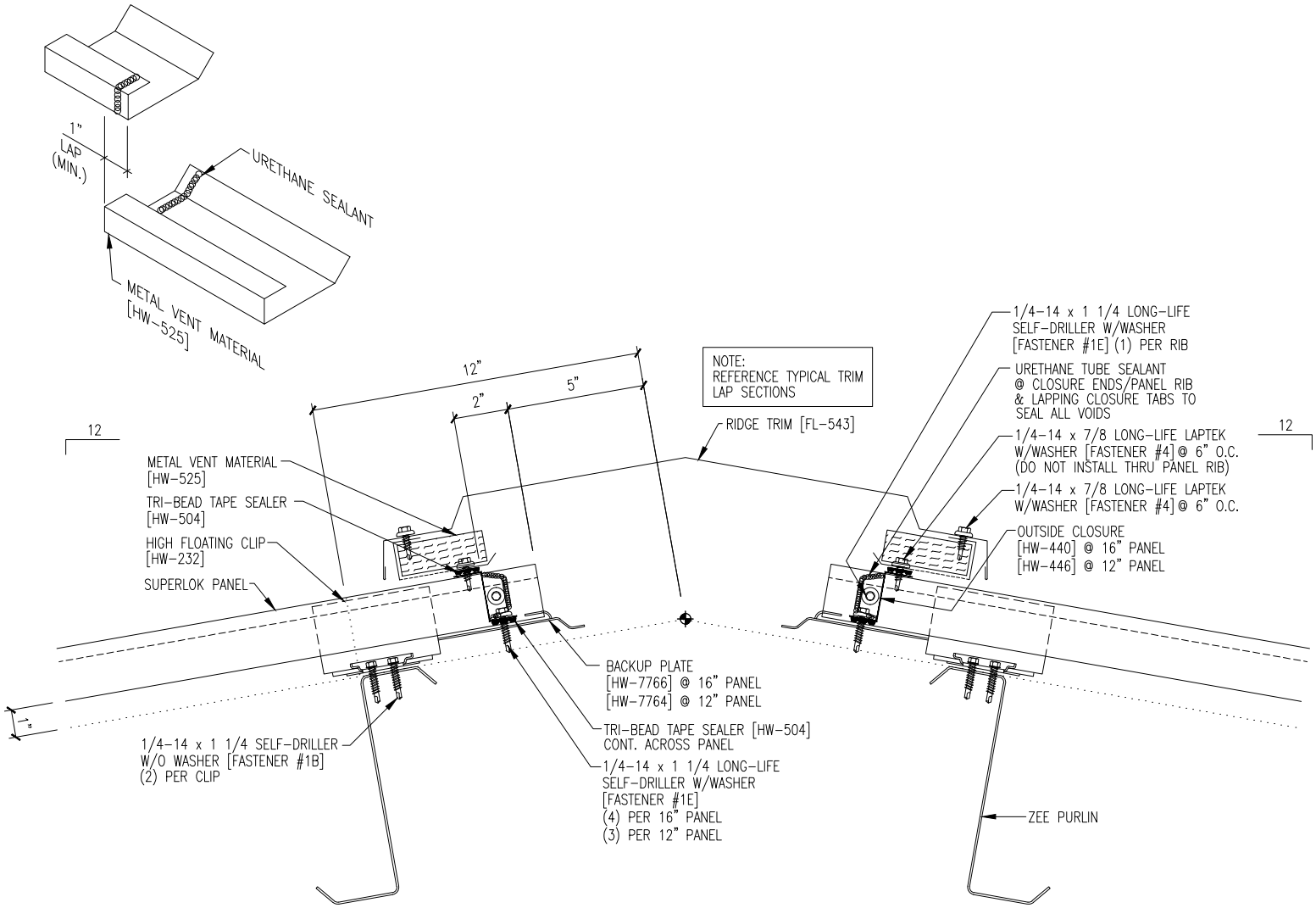
1"
LAP
(MIN.)
URETHANE SEALANT
METAL VENT MATERIAL
[HW-525]
12"
2"
5"
NOTE:
REFERENCE TYPICAL TRIM
LAP SECTIONS
RIDGE TRIM [FL-543]
12
12
METAL VENT MATERIAL
[HW-525]
TRI-BEAD TAPE SEALER
[HW-504]
HIGH FLOATING CLIP
[HW-232]
SUPERLOK PANEL
1/4-14 x 1 1/4 LONG-LIFE
SELF-DRILLER W/WASHER
[FASTENER #1E] (1) PER RIB
URETHANE TUBE SEALANT
@ CLOSURE ENDS/PANEL RIB
& LAPPING CLOSURE TABS TO
SEAL ALL VOIDS
1/4-14 x 7/8 LONG-LIFE LAPTEK
W/WASHER [FASTENER #4] @ 6" O.C.
(DO NOT INSTALL THRU PANEL RIB)
1/4-14 x 7/8 LONG-LIFE LAPTEK
W/WASHER [FASTENER #4] @ 6" O.C.
OUTSIDE CLOSURE
[HW-440] @ 16" PANEL
[HW-446] @ 12" PANEL
BACKUP PLATE
[HW-7766] @ 16" PANEL
[HW-7764] @ 12" PANEL
TRI-BEAD TAPE SEALER [HW-504]
CONT. ACROSS PANEL
1/4-14 x 1 1/4 LONG-LIFE
SELF-DRILLER W/WASHER
[FASTENER #1E]
(4) PER 16" PANEL
(3) PER 12" PANEL
1/4-14 x 1 1/4 SELF-DRILLER
W/O WASHER [FASTENER #1B]
(2) PER CLIP
ZEE PURLIN