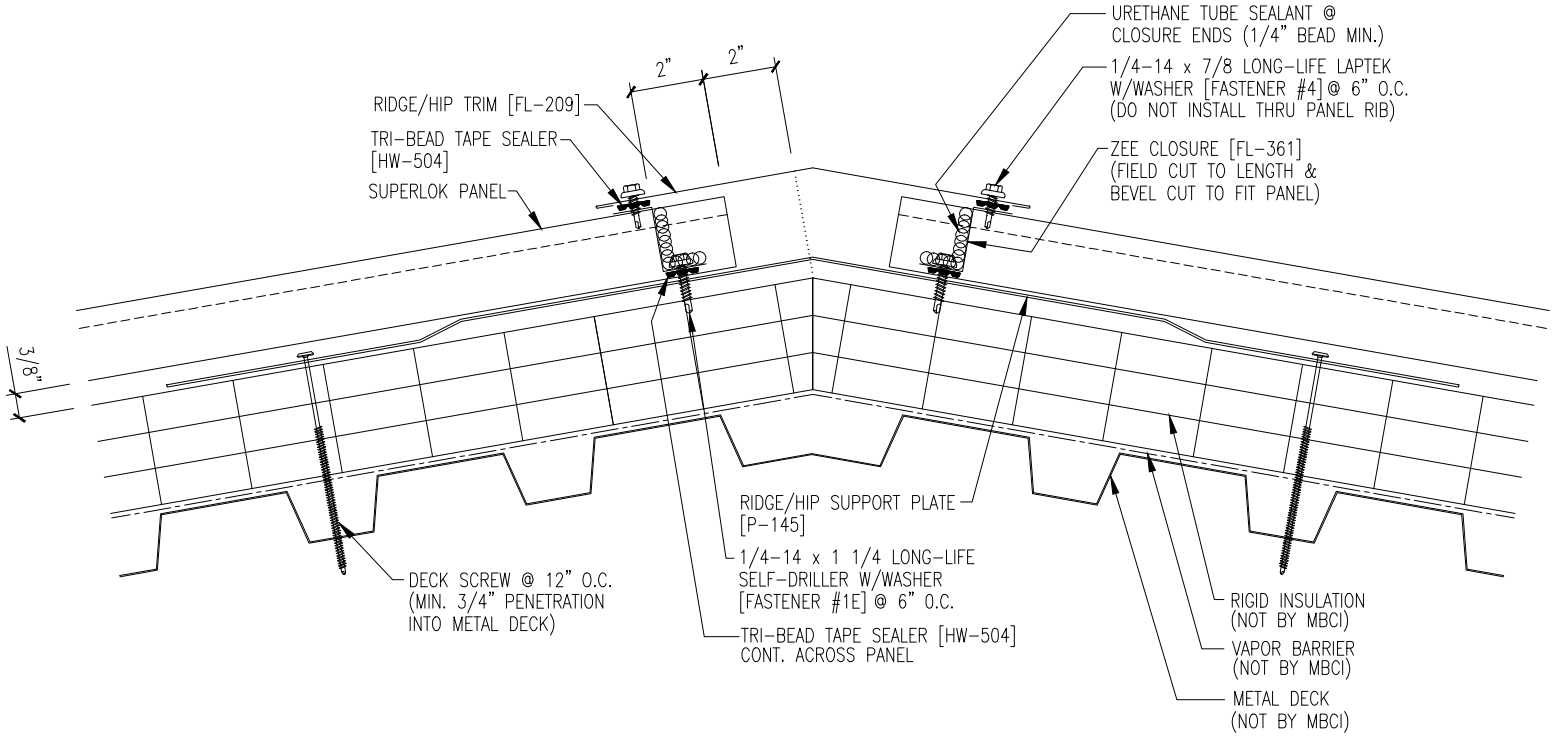
URETHANE TUBE SEALANT @
CLOSURE ENDS (1/4" BEAD MIN.)
2"
2"
1/4-14 x 7/8 LONG-LIFE LAPTEK
W/WASHER [FASTENER #4] @ 6" O.C.
(DO NOT INSTALL THRU PANEL RIB)
RIDGE/HIP TRIM [FL-209]
TRI-BEAD TAPE SEALER
[HW-504]
ZEE CLOSURE [FL-361]
(FIELD CUT TO LENGTH &
BEVEL CUT TO FIT PANEL)
SUPERLOK PANEL
3/8"
RIDGE/HIP SUPPORT PLATE
[P-145]
1/4-14 x 1 1/4 LONG-LIFE
SELF-DRILLER W/WASHER
[FASTENER #1E] @ 6" O.C.
DECK SCREW @ 12" O.C.
(MIN. 3/4" PENETRATION
INTO METAL DECK)
TRI-BEAD TAPE SEALER [HW-504]
CONT. ACROSS PANEL
RIGID INSULATION
(NOT BY MBCI)
VAPOR BARRIER
(NOT BY MBCI)
METAL DECK
(NOT BY MBCI)