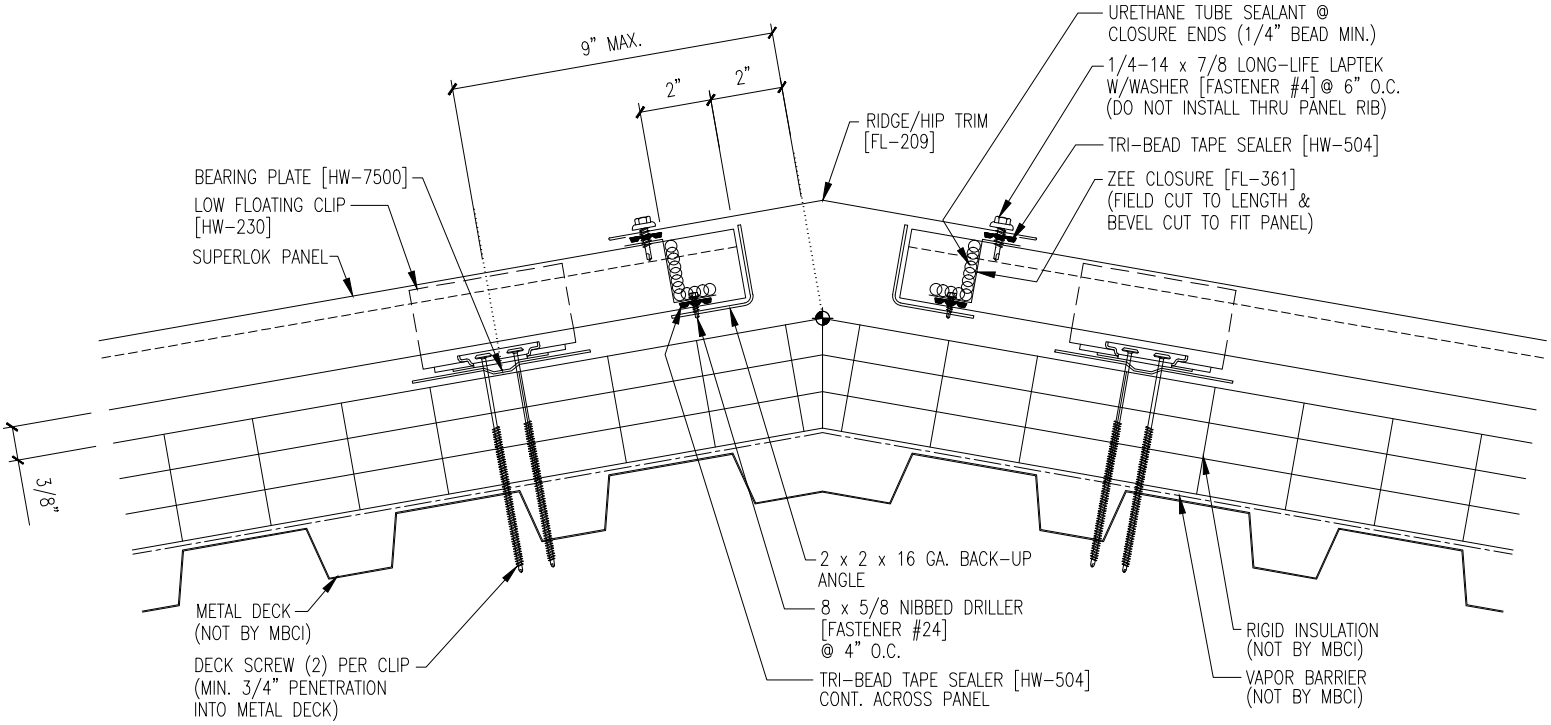
9" MAX.
2"
2"
URETHANE TUBE SEALANT @
CLOSURE ENDS (1/4" BEAD MIN.)
1/4-14 x 7/8 LONG-LIFE LAPTEK
W/WASHER [FASTENER #4] @ 6" O.C.
(DO NOT INSTALL THRU PANEL RIB)
RIDGE/HIP TRIM
[FL-209]
TRI-BEAD TAPE SEALER [HW-504]
ZEE CLOSURE [FL-361]
(FIELD CUT TO LENGTH &
BEVEL CUT TO FIT PANEL)
BEARING PLATE [HW-7500]
LOW FLOATING CLIP
[HW-230]
SUPERLOK PANEL
3/8"
2 x 2 x 16 GA. BACK-UP
ANGLE
8 x 5/8 NIBBED DRILLER
[FASTENER #24]
@ 4" O.C.
TRI-BEAD TAPE SEALER [HW-504]
CONT. ACROSS PANEL
METAL DECK
(NOT BY MBCI)
DECK SCREW (2) PER CLIP
(MIN. 3/4" PENETRATION
INTO METAL DECK)
RIGID INSULATION
(NOT BY MBCI)
VAPOR BARRIER
(NOT BY MBCI)