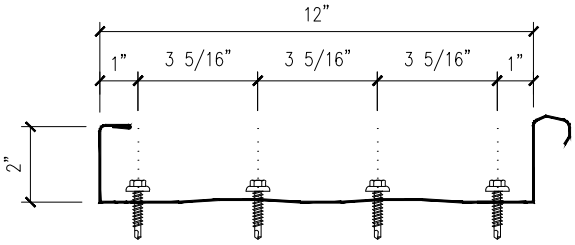

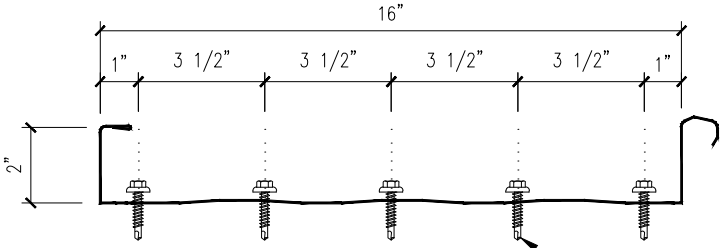

1/4-14 x 1 1/4 LONG-LIFE SELF-DRILLER W/WASHER [FASTENER #1E]

FASTENER SPACING @ EAVE

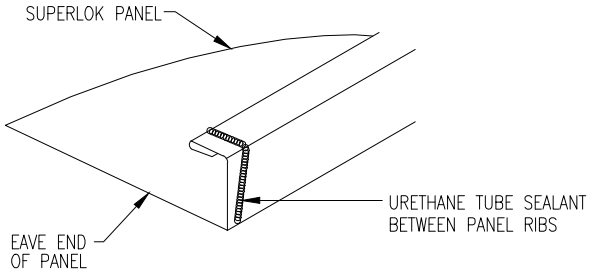

EAVE SEALANT DETAIL

URETHANE SEALANT MUST COME IN CONTACT WITH TAPE SEALER TO FORM A WEATHERTIGHT SEAL

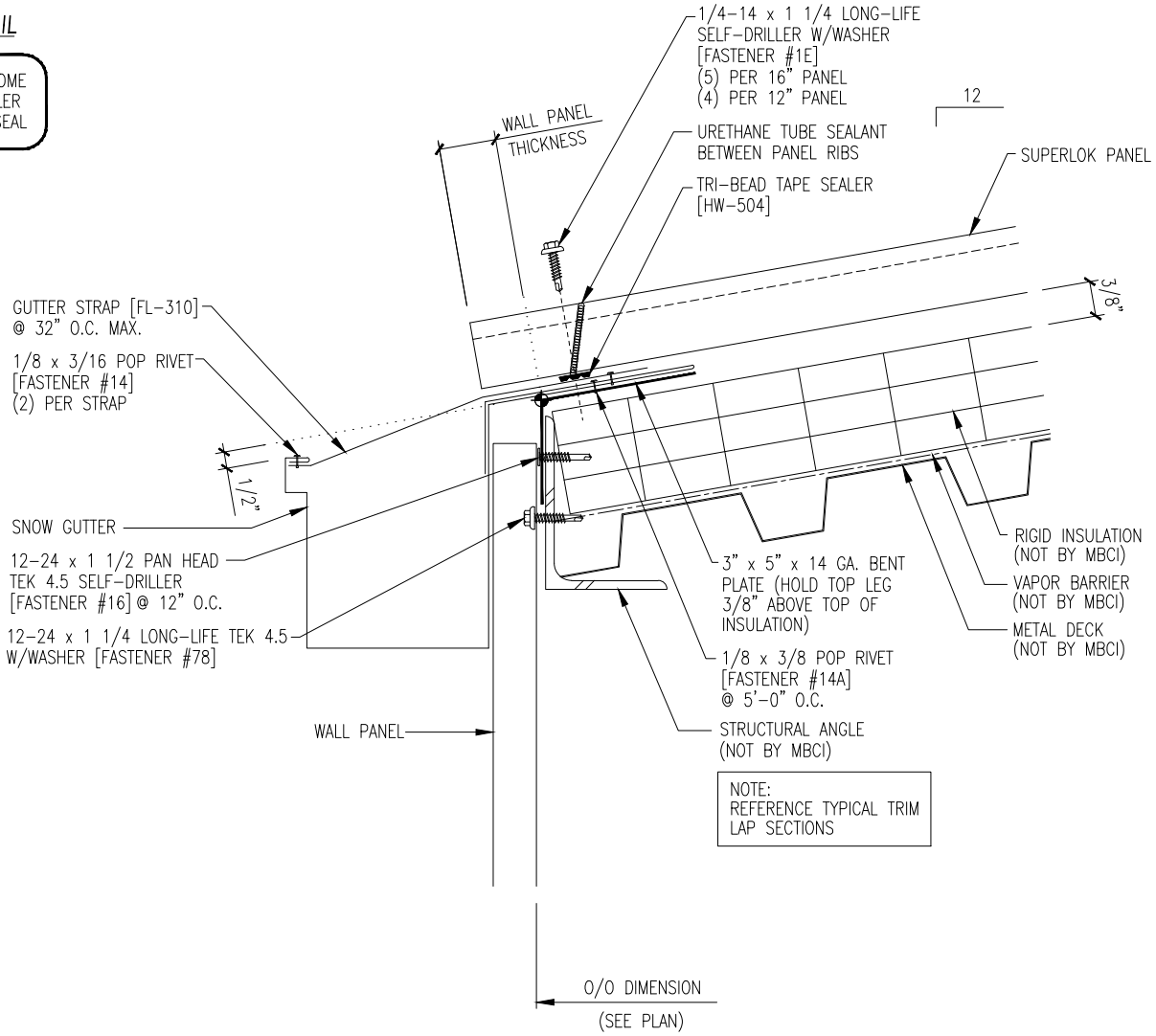

NOTE:
REFERENCE TYPICAL TRIM LAP SECTIONS