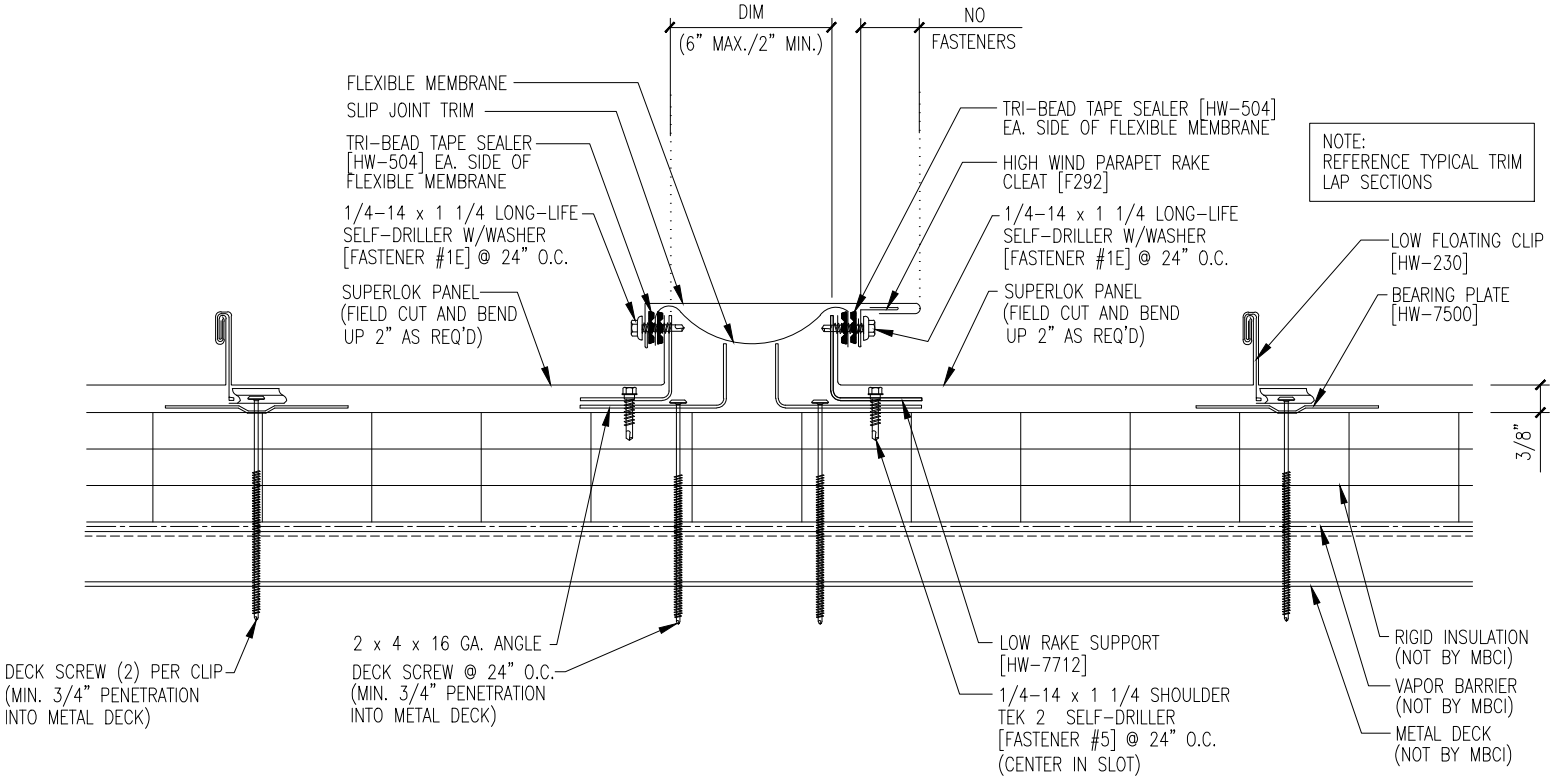
DIM
(6" MAX./2" MIN.)
NO
FASTENERS
FLEXIBLE MEMBRANE
SLIP JOINT TRIM
TRI-BEAD TAPE SEALER [HW-504] EA. SIDE OF FLEXIBLE MEMBRANE
1/4-14 x 1 1/4 LONG-LIFE SELF-DRILLER W/WASHER [FASTENER #1E] @ 24" O.C.
SUPERLOK PANEL (FIELD CUT AND BEND UP 2" AS REQ'D)
TRI-BEAD TAPE SEALER [HW-504] EA. SIDE OF FLEXIBLE MEMBRANE
HIGH WIND PARAPET RAKE CLEAT [F292]
1/4-14 x 1 1/4 LONG-LIFE SELF-DRILLER W/WASHER [FASTENER #1E] @ 24" O.C.
SUPERLOK PANEL (FIELD CUT AND BEND UP 2" AS REQ'D)
NOTE:
REFERENCE TYPICAL TRIM LAP SECTIONS
LOW FLOATING CLIP [HW-230]
BEARING PLATE [HW-7500]
3/8"
DECK SCREW (2) PER CLIP (MIN. 3/4" PENETRATION INTO METAL DECK)
2 x 4 x 16 GA. ANGLE
DECK SCREW @ 24" O.C. (MIN. 3/4" PENETRATION INTO METAL DECK)
LOW RAKE SUPPORT [HW-7712]
1/4-14 x 1 1/4 SHOULDER TEK 2 SELF-DRILLER [FASTENER #5] @ 24" O.C. (CENTER IN SLOT)
RIGID INSULATION (NOT BY MBCI)
VAPOR BARRIER (NOT BY MBCI)
METAL DECK (NOT BY MBCI)