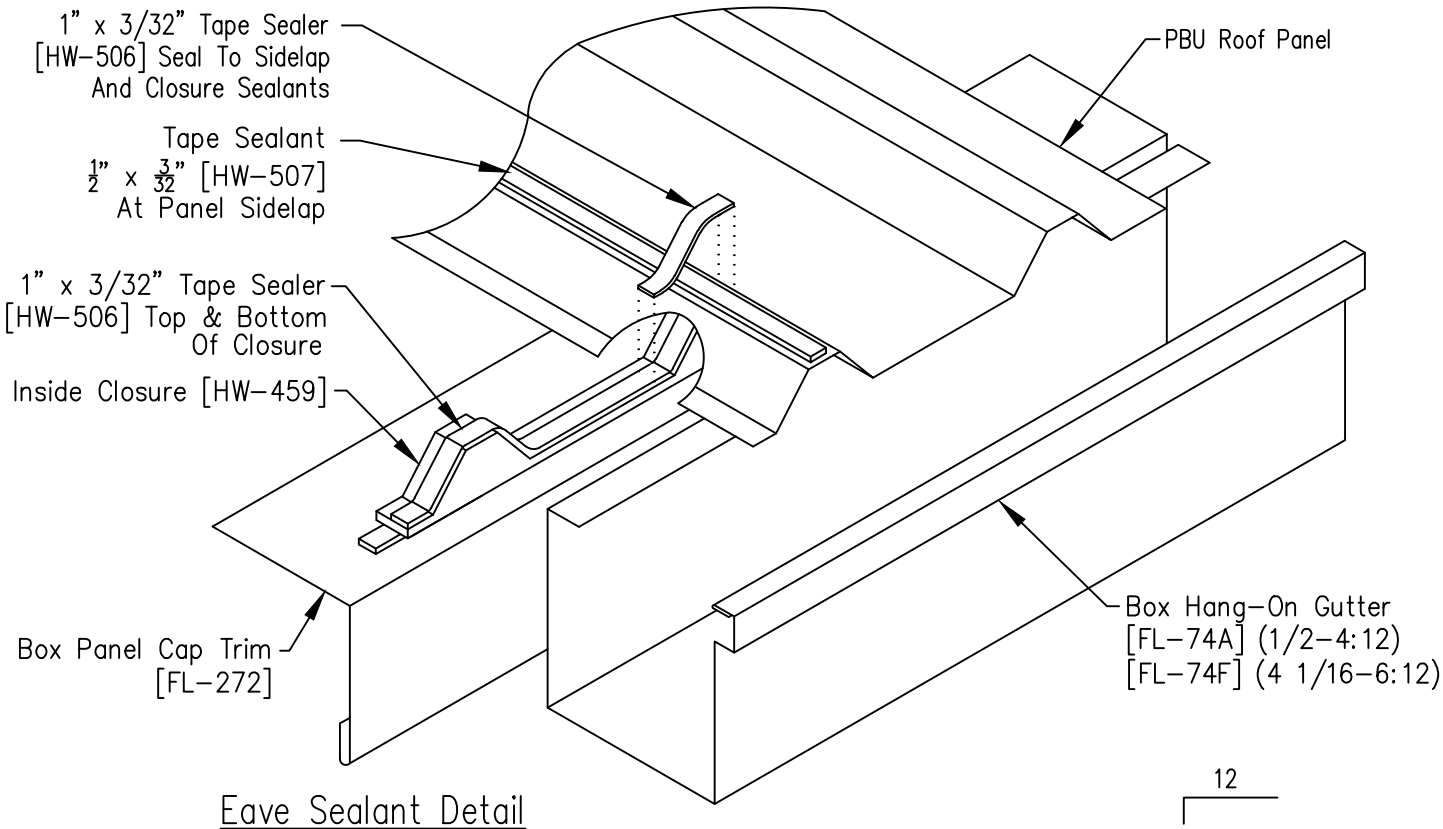

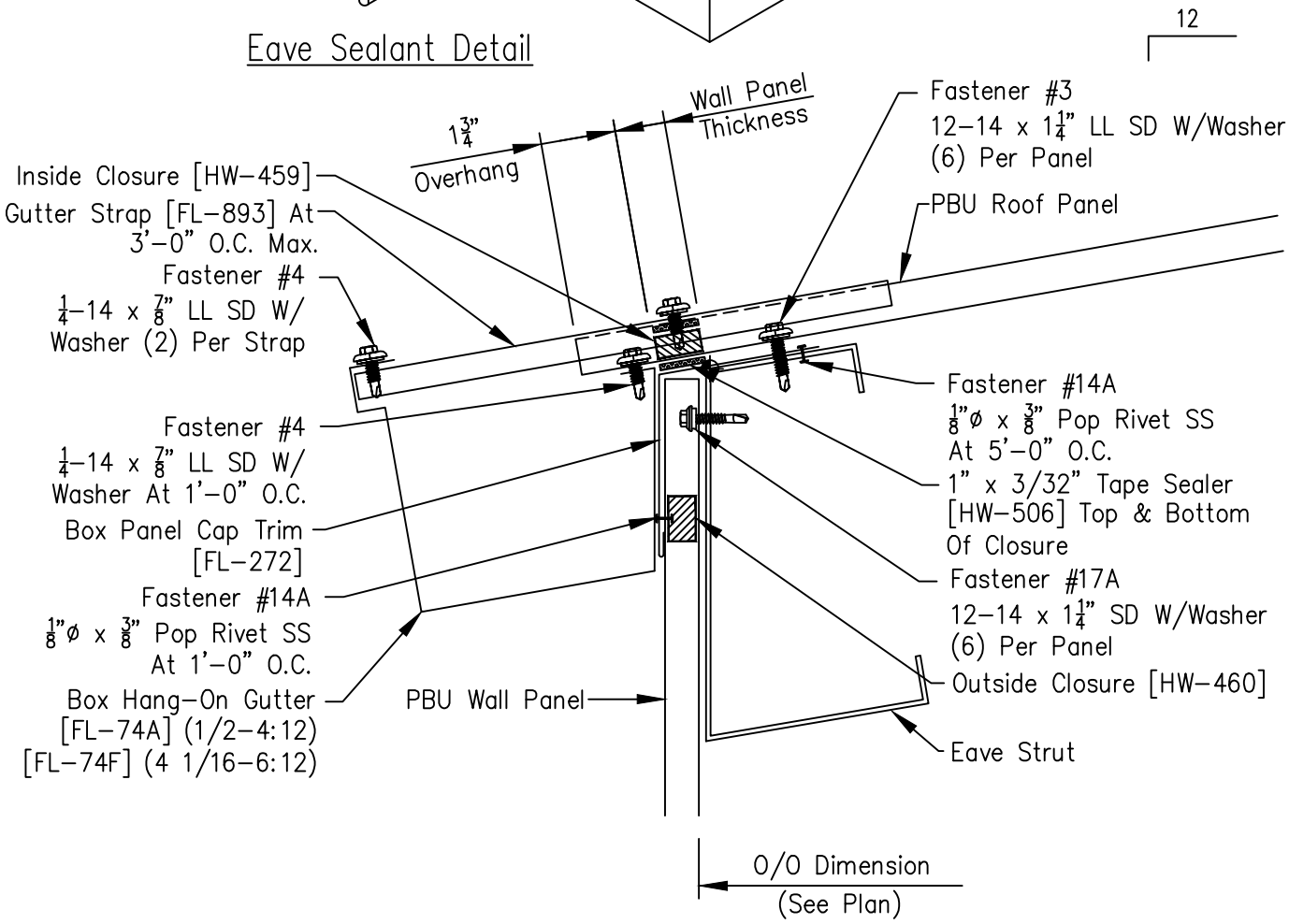
Eave Sealant Detail