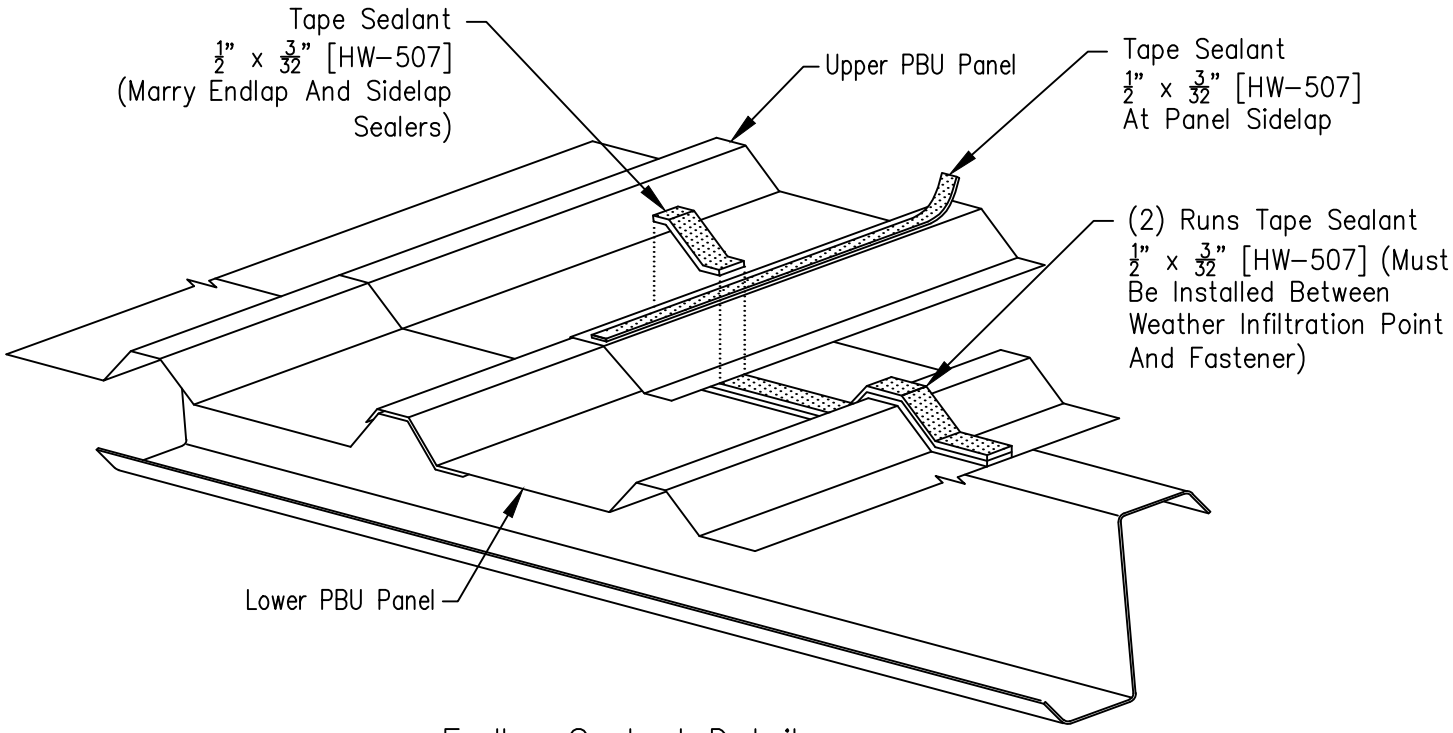

Endlap Sealant Detail

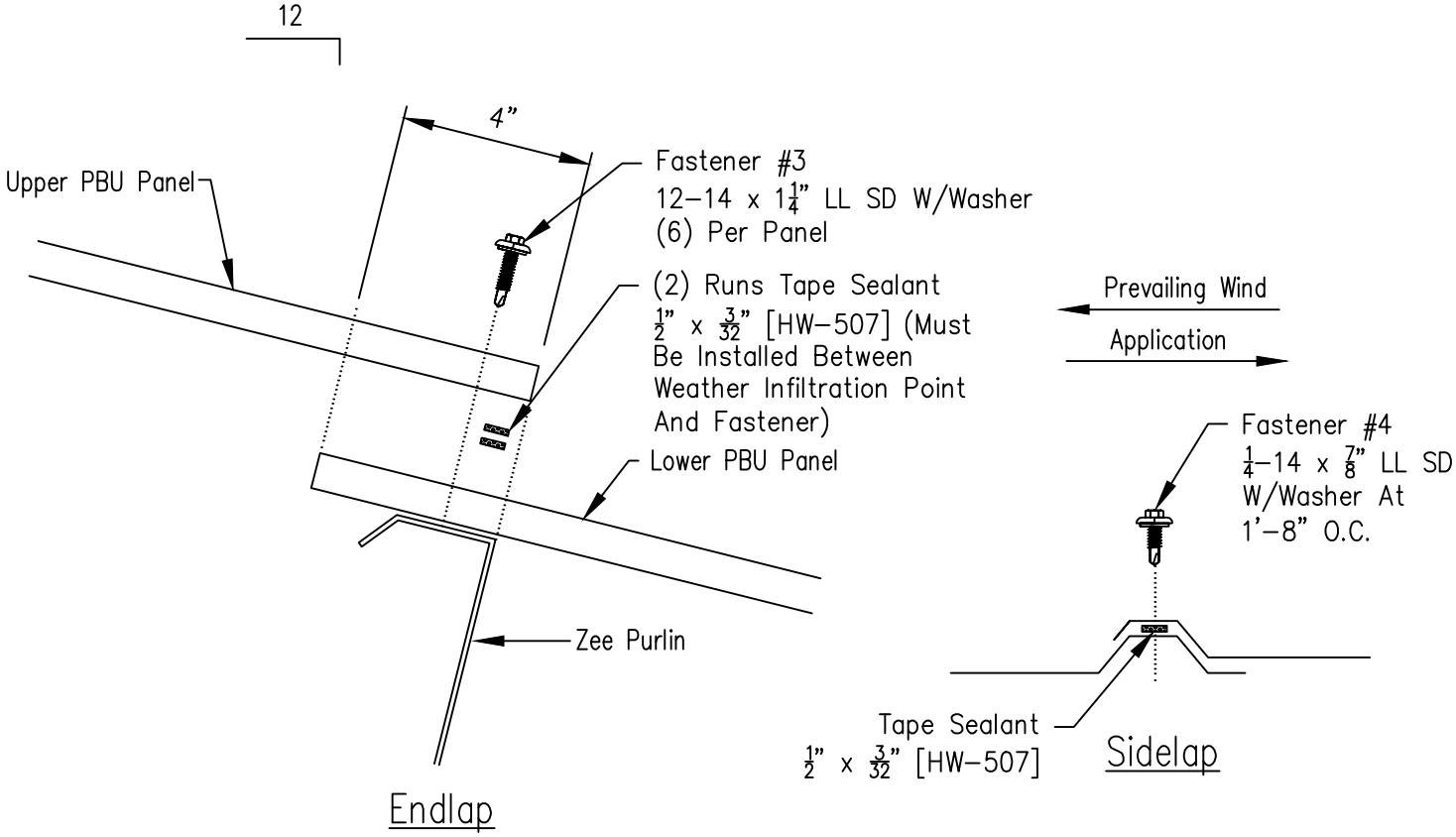

Endlap

Sidelap