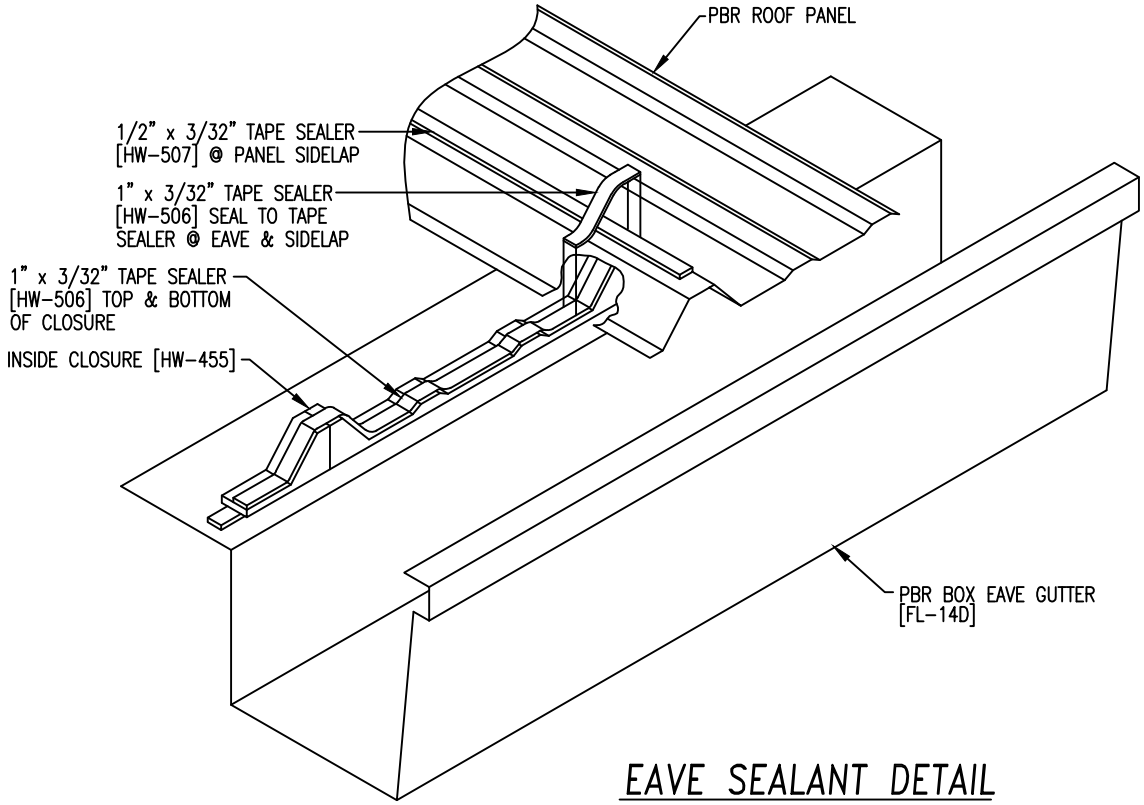

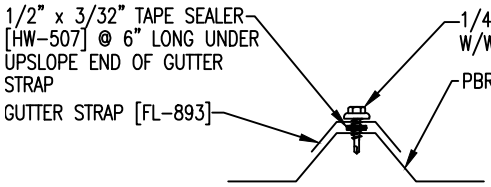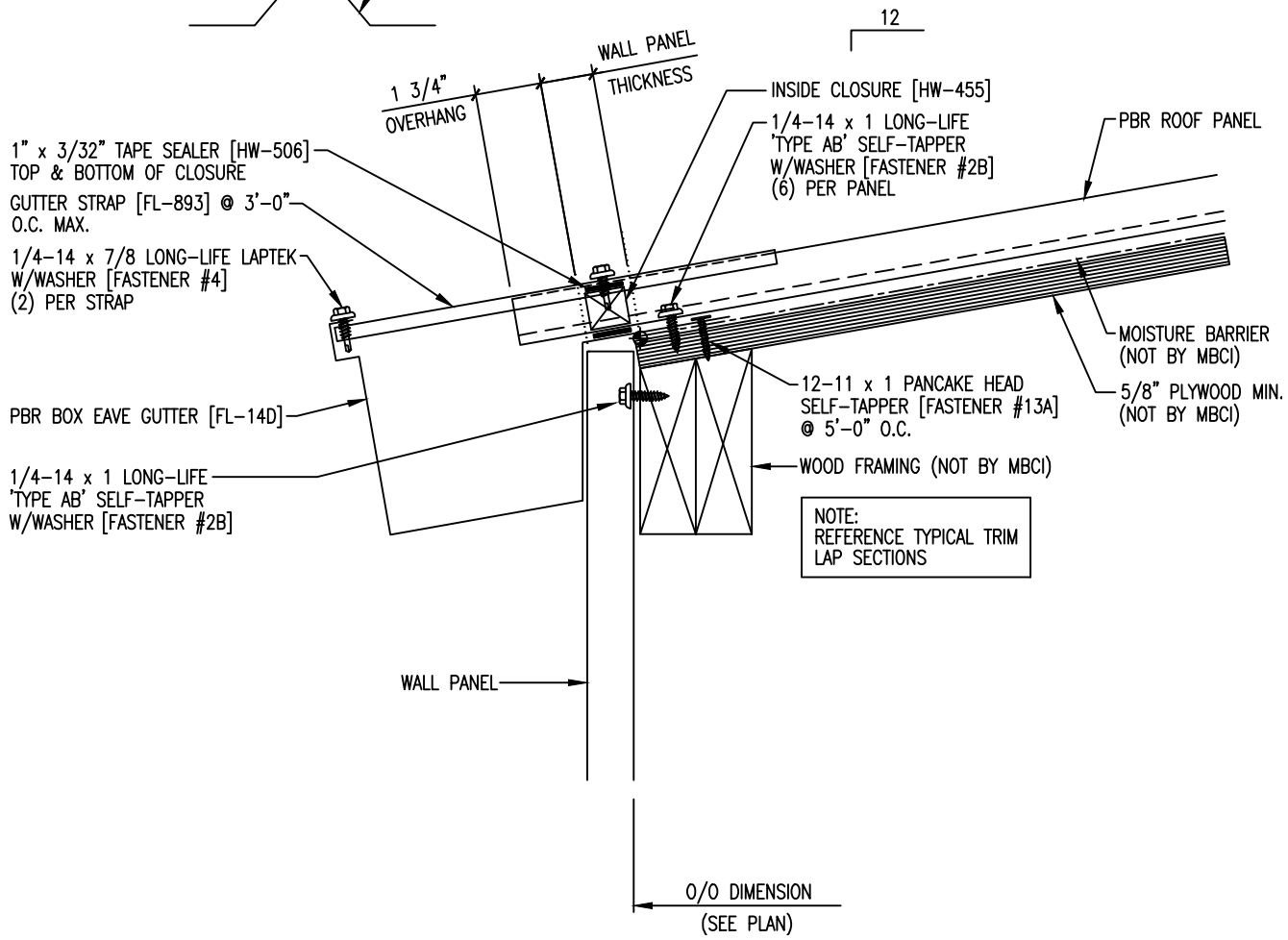
## EAVE SEALANT DETAIL