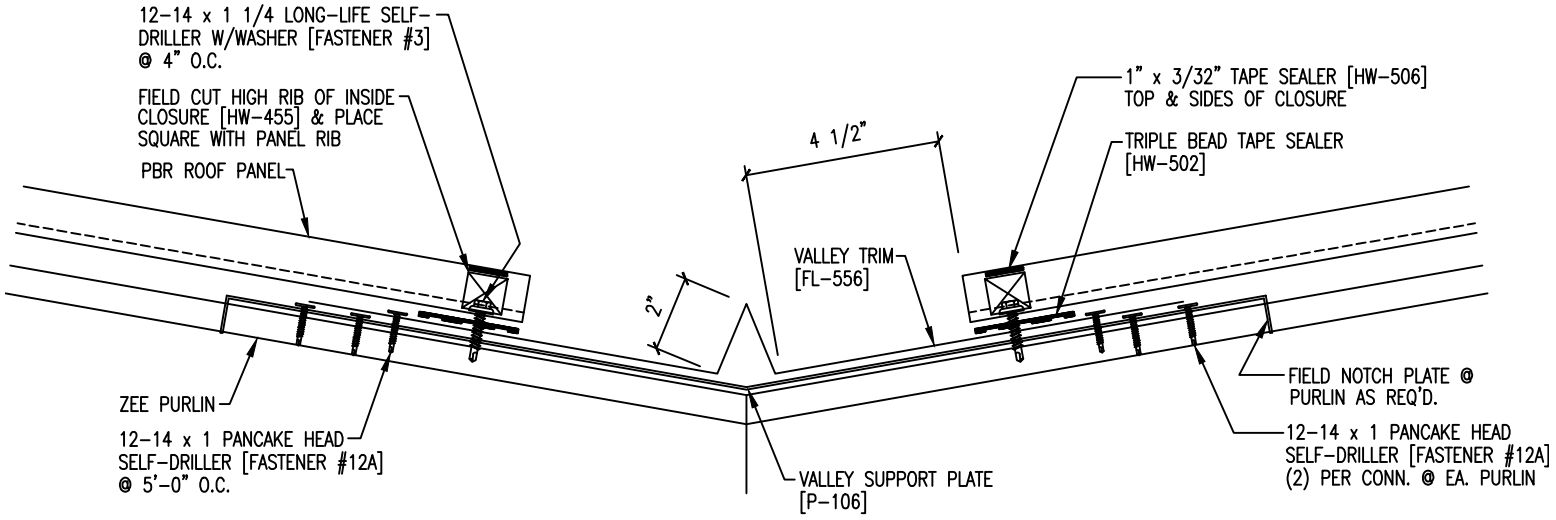


NOTE:
REFERENCE TYPICAL TRIM LAP SECTIONS