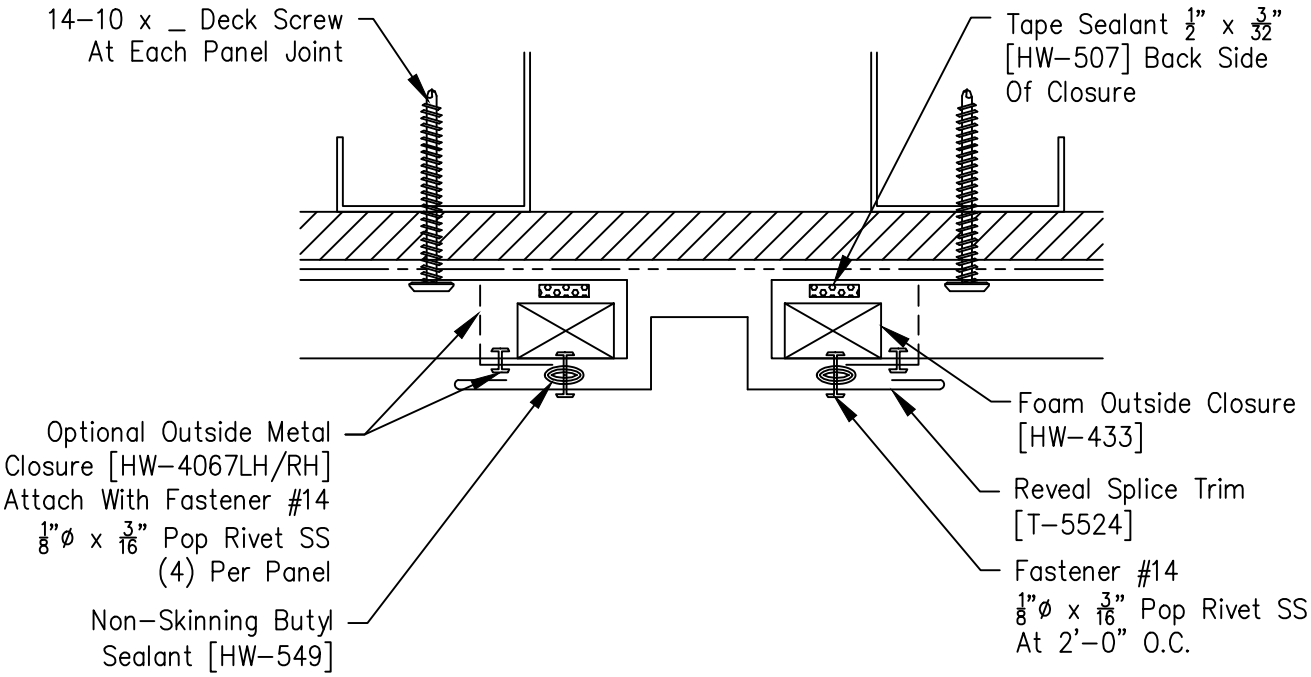
14–10 x _ Deck Screw
At Each Panel Joint
Tape Sealant 1/2" x 3/32"
[HW–507] Back Side
Of Closure
Foam Outside Closure
[HW–433]
Reveal Splice Trim
[T–5524]
Fastener #14
1/8"ø x 3/16" Pop Rivet SS
At 2'–0" O.C.
Optional Outside Metal
Closure [HW–4067LH/RH]
Attach With Fastener #14
1/8"ø x 3/16" Pop Rivet SS
(4) Per Panel
Non–Skinning Butyl
Sealant [HW–549]

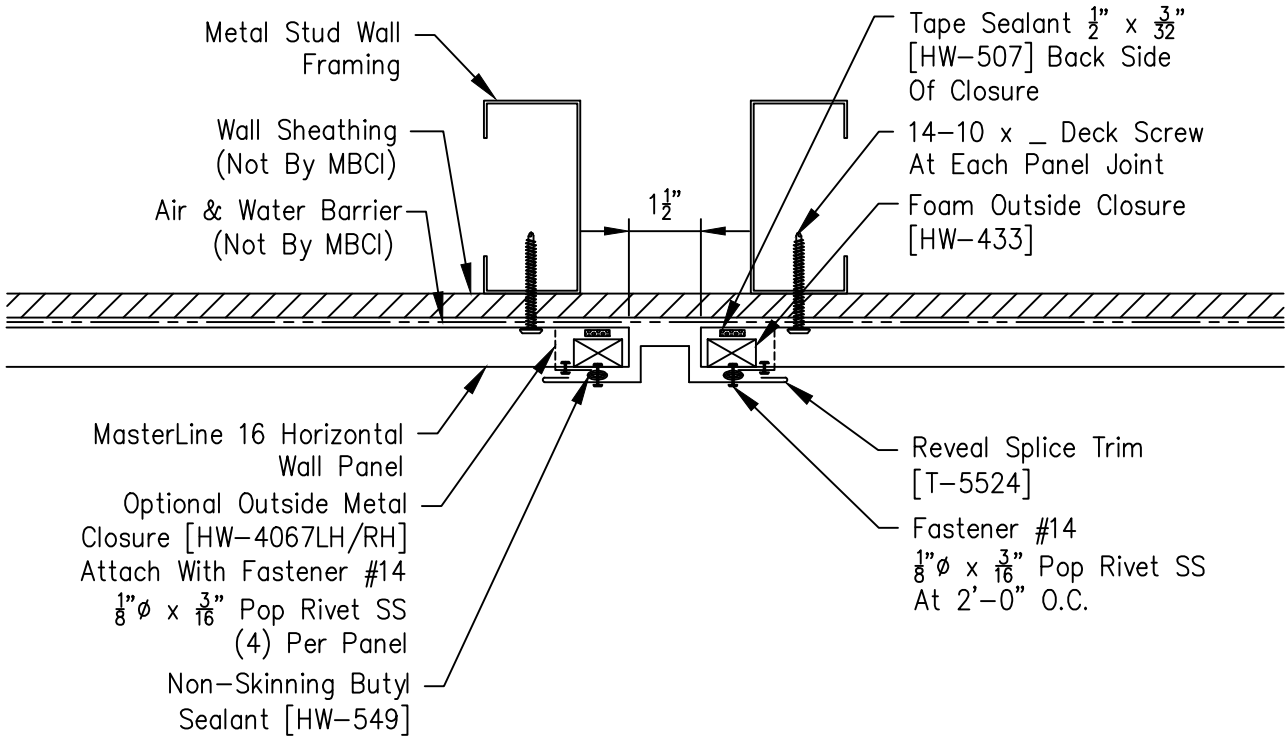
Metal Stud Wall
Framing
Wall Sheathing
(Not By MBCI)
Air & Water Barrier
(Not By MBCI)
1 1/2"
Tape Sealant 1/2" x 3/32"
[HW–507] Back Side
Of Closure
14–10 x _ Deck Screw
At Each Panel Joint
Foam Outside Closure
[HW–433]
MasterLine 16 Horizontal
Wall Panel
Optional Outside Metal
Closure [HW–4067LH/RH]
Attach With Fastener #14
1/8"ø x 3/16" Pop Rivet SS
(4) Per Panel
Non–Skinning Butyl
Sealant [HW–549]
Reveal Splice Trim
[T–5524]
Fastener #14
1/8"ø x 3/16" Pop Rivet SS
At 2'–0" O.C.