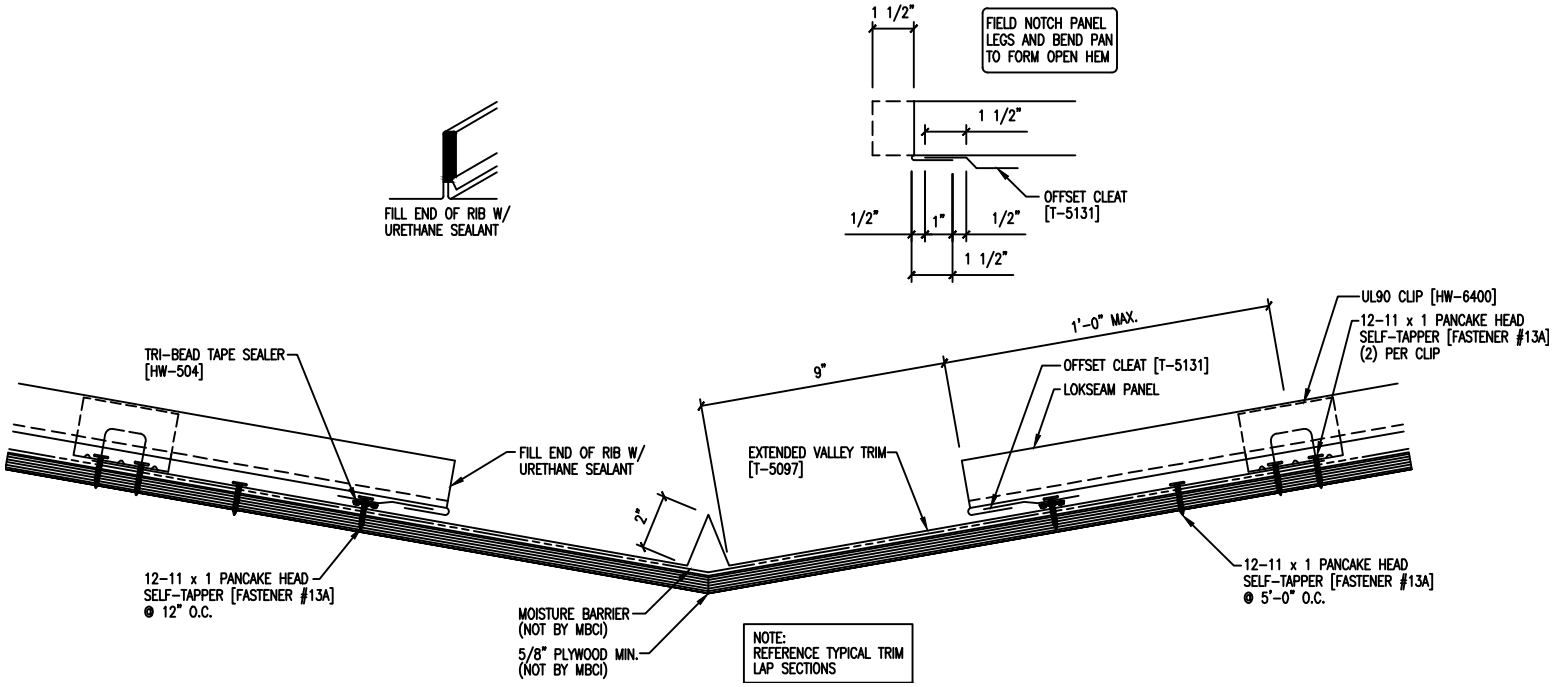
FILL END OF RIB W/
URETHANE SEALANT
1 1/2"
FIELD NOTCH PANEL
LEGS AND BEND PAN
TO FORM OPEN HEM
1 1/2"
OFFSET CLEAT
[T-5131]
1/2"
1"
1/2"
1 1/2"
UL90 CLIP [HW-6400]
1'-0" MAX.
12-11 x 1 PANCAKE HEAD
SELF-TAPPER [FASTENER #13A]
(2) PER CLIP
TRI-BEAD TAPE SEALER
[HW-504]
9"
OFFSET CLEAT [T-5131]
LOKSEAM PANEL
FILL END OF RIB W/
URETHANE SEALANT
EXTENDED VALLEY TRIM
[T-5097]
2"
12-11 x 1 PANCAKE HEAD
SELF-TAPPER [FASTENER #13A]
@ 12" O.C.
MOISTURE BARRIER
(NOT BY MBCI)
5/8" PLYWOOD MIN.
(NOT BY MBCI)
12-11 x 1 PANCAKE HEAD
SELF-TAPPER [FASTENER #13A]
@ 5'-0" O.C.
NOTE:
REFERENCE TYPICAL TRIM
LAP SECTIONS