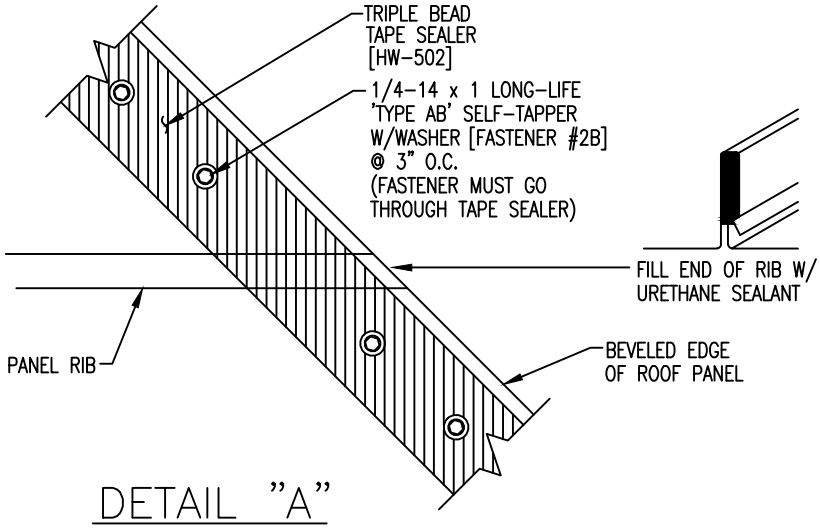

DETAIL "A"

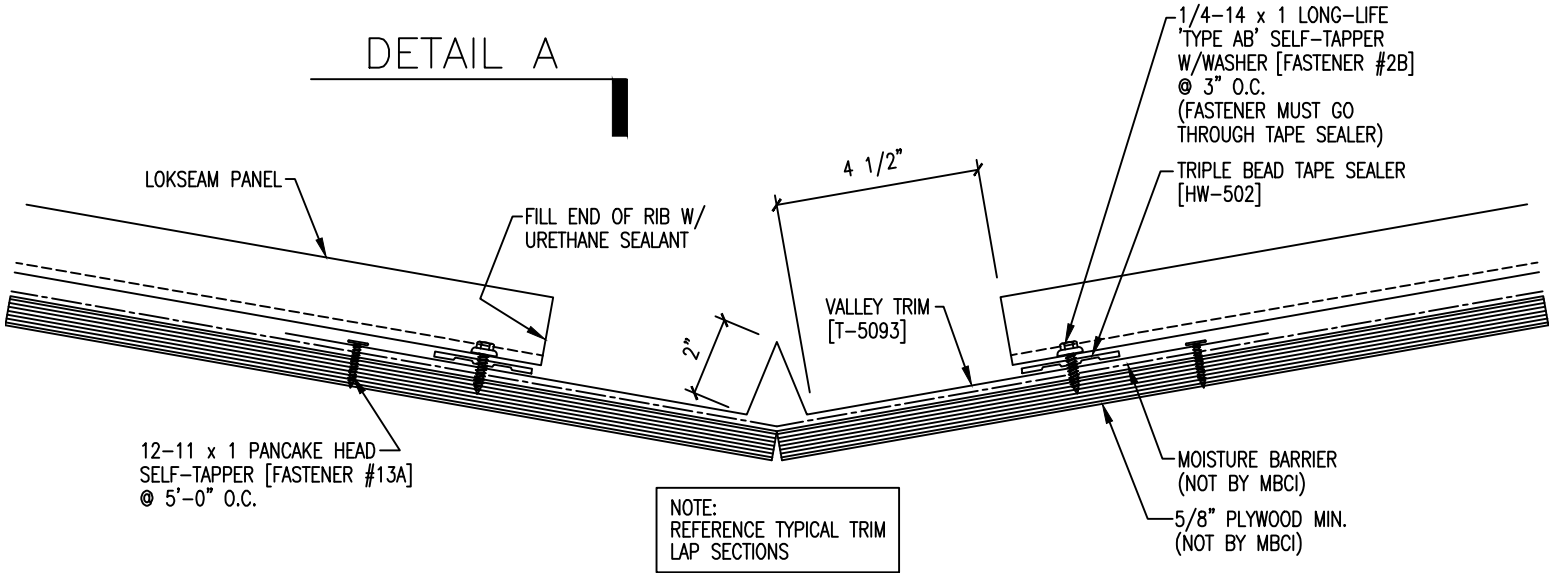

NOTE:
REFERENCE TYPICAL TRIM
LAP SECTIONS