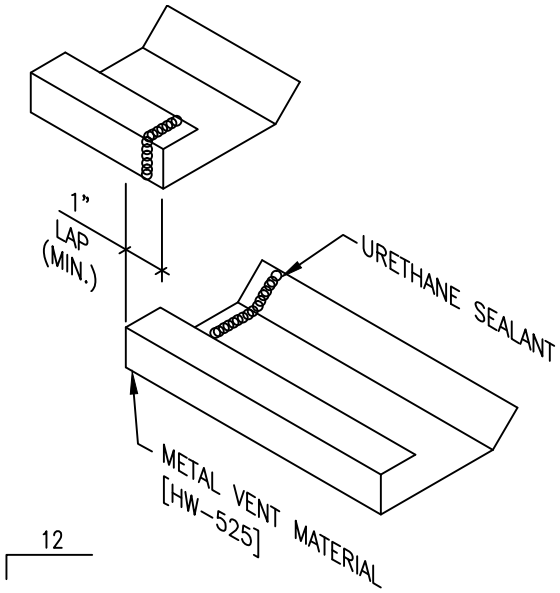

12

12

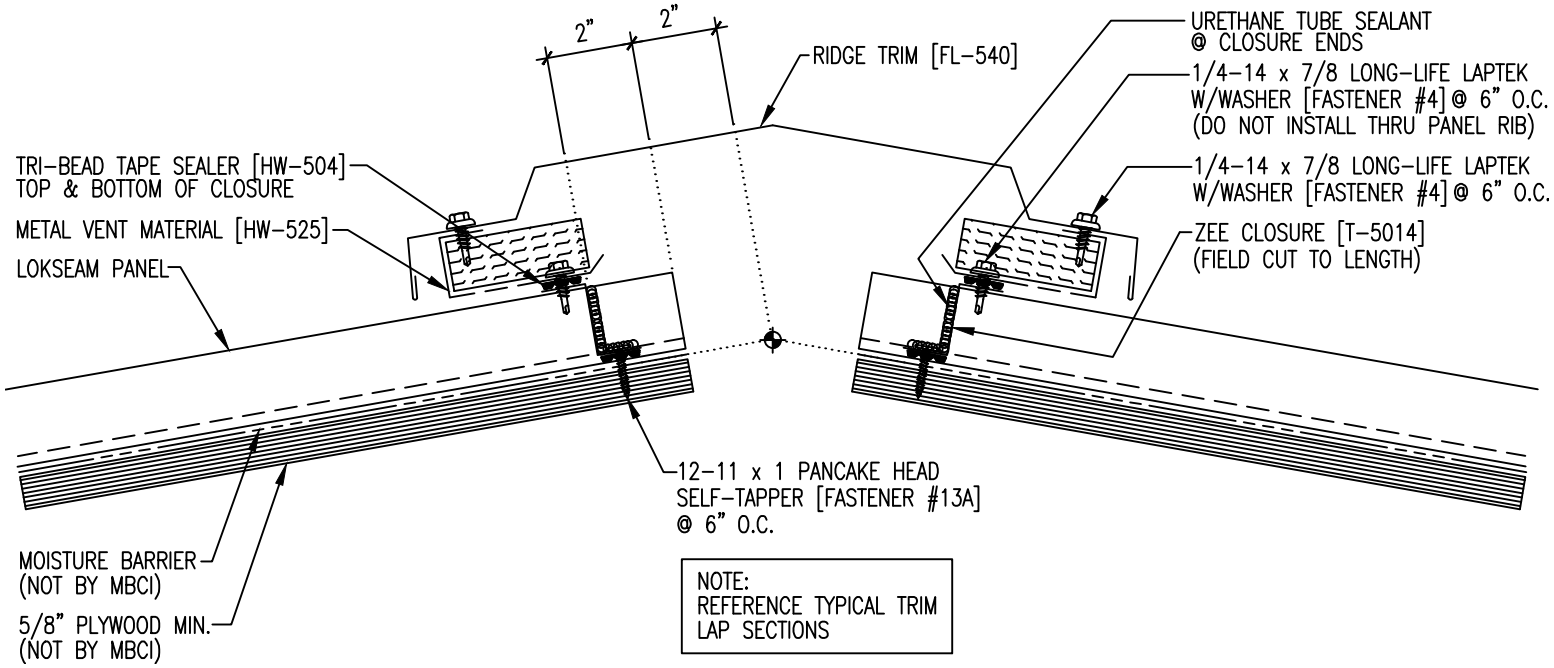

NOTE:
REFERENCE TYPICAL TRIM
LAP SECTIONS