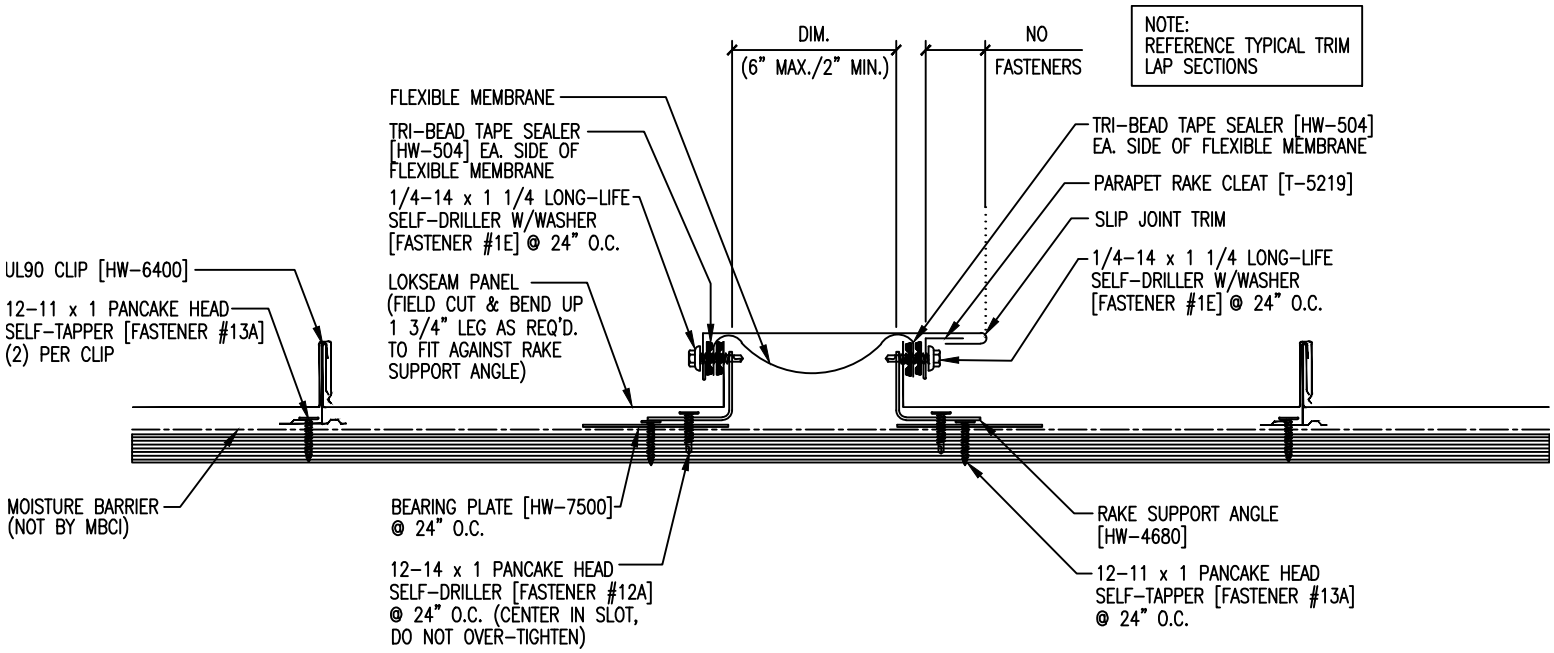
NOTE:
REFERENCE TYPICAL TRIM
LAP SECTIONS
DIM.
(6" MAX./2" MIN.)
NO
FASTENERS
FLEXIBLE MEMBRANE
TRI-BEAD TAPE SEALER
[HW-504] EA. SIDE OF
FLEXIBLE MEMBRANE
1/4-14 x 1 1/4 LONG-LIFE
SELF-DRILLER W/WASHER
[FASTENER #1E] @ 24" O.C.
UL90 CLIP [HW-6400]
12-11 x 1 PANCAKE HEAD
SELF-TAPPER [FASTENER #13A]
(2) PER CLIP
LOKSEAM PANEL
(FIELD CUT & BEND UP
1 3/4" LEG AS REQ'D.
TO FIT AGAINST RAKE
SUPPORT ANGLE)
TRI-BEAD TAPE SEALER [HW-504]
EA. SIDE OF FLEXIBLE MEMBRANE
PARAPET RAKE CLEAT [T-5219]
SLIP JOINT TRIM
1/4-14 x 1 1/4 LONG-LIFE
SELF-DRILLER W/WASHER
[FASTENER #1E] @ 24" O.C.
MOISTURE BARRIER
(NOT BY MBCI)
BEARING PLATE [HW-7500]
@ 24" O.C.
12-14 x 1 PANCAKE HEAD
SELF-DRILLER [FASTENER #12A]
@ 24" O.C. (CENTER IN SLOT,
DO NOT OVER-TIGHTEN)
RAKE SUPPORT ANGLE
[HW-4680]
12-11 x 1 PANCAKE HEAD
SELF-TAPPER [FASTENER #13A]
@ 24" O.C.