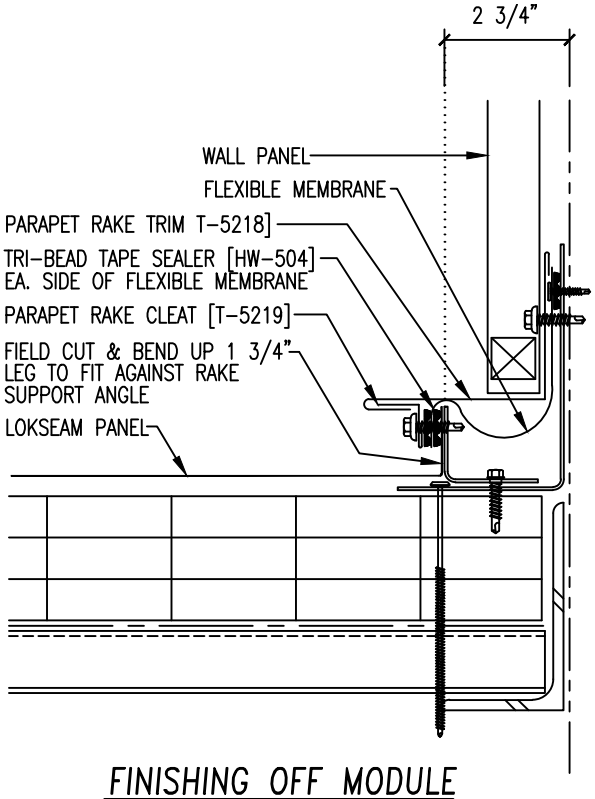

FINISHING OFF MODULE

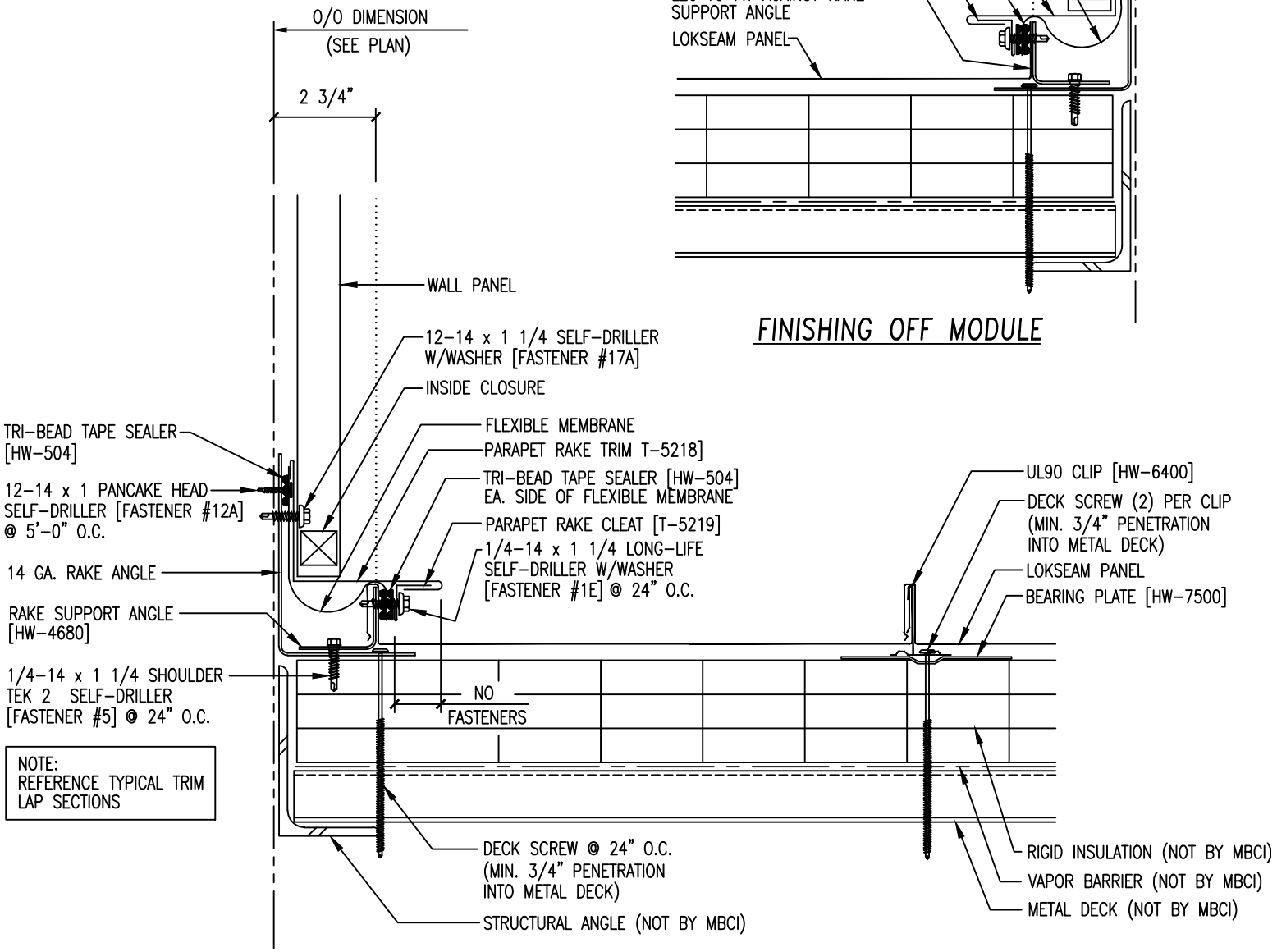

NOTE:
REFERENCE TYPICAL TRIM
LAP SECTIONS