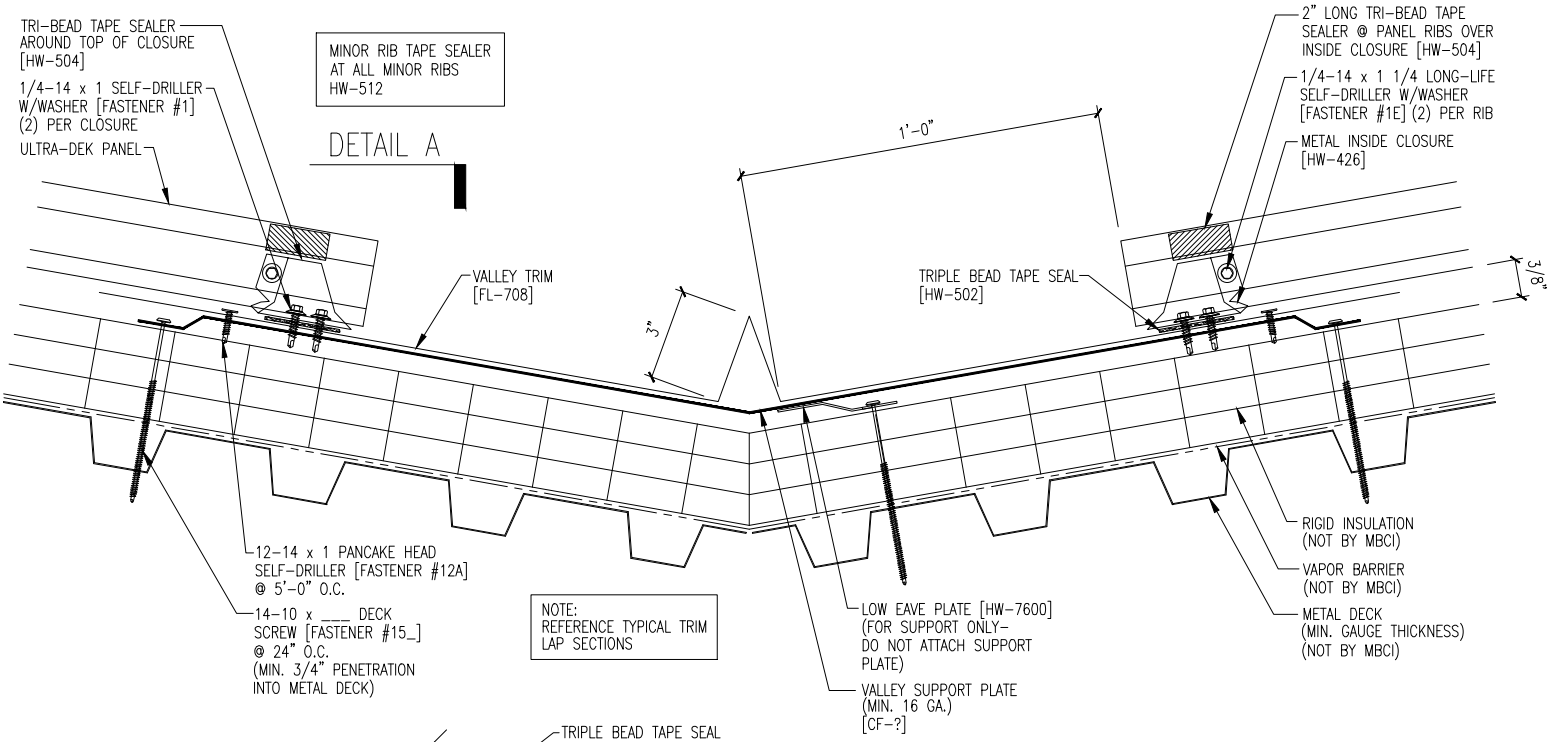
TRI-BEAD TAPE SEALER AROUND TOP OF CLOSURE [HW-504]
1/4-14 x 1 SELF-DRILLER W/WASHER [FASTENER #1] (2) PER CLOSURE
ULTRA-DEK PANEL
MINOR RIB TAPE SEALER AT ALL MINOR RIBS HW-512
DETAIL A
VALLEY TRIM [FL-708]
3"
1'-0"
TRIPLE BEAD TAPE SEAL [HW-502]
2" LONG TRI-BEAD TAPE SEALER @ PANEL RIBS OVER INSIDE CLOSURE [HW-504]
1/4-14 x 1 1/4 LONG-LIFE SELF-DRILLER W/WASHER [FASTENER #1E] (2) PER RIB
METAL INSIDE CLOSURE [HW-426]
3/8"
12-14 x 1 PANCAKE HEAD SELF-DRILLER [FASTENER #12A] @ 5'-0" O.C.
14-10 x ___ DECK SCREW [FASTENER #15_] @ 24" O.C. (MIN. 3/4" PENETRATION INTO METAL DECK)
NOTE: REFERENCE TYPICAL TRIM LAP SECTIONS
LOW EAVE PLATE [HW-7600] (FOR SUPPORT ONLY- DO NOT ATTACH SUPPORT PLATE)
VALLEY SUPPORT PLATE (MIN. 16 GA.) [CF-?]
RIGID INSULATION (NOT BY MBCI)
VAPOR BARRIER (NOT BY MBCI)
METAL DECK (MIN. GAUGE THICKNESS) (NOT BY MBCI)

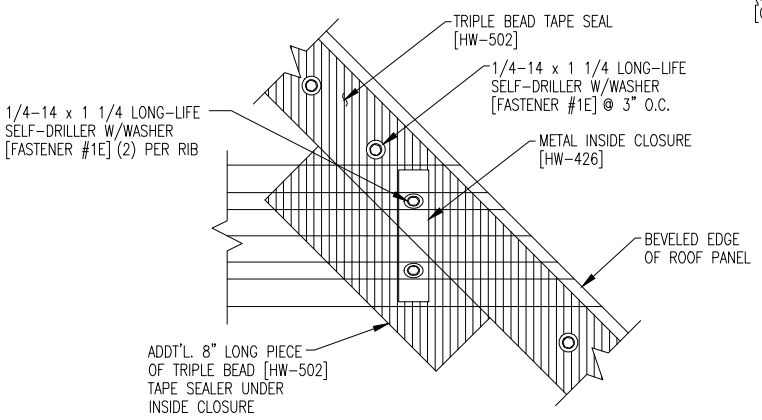
TRIPLE BEAD TAPE SEAL [HW-502]
1/4-14 x 1 1/4 LONG-LIFE SELF-DRILLER W/WASHER [FASTENER #1E] @ 3" O.C.
1/4-14 x 1 1/4 LONG-LIFE SELF-DRILLER W/WASHER [FASTENER #1E] (2) PER RIB
METAL INSIDE CLOSURE [HW-426]
BEVELED EDGE OF ROOF PANEL
ADDT'L. 8" LONG PIECE OF TRIPLE BEAD [HW-502] TAPE SEALER UNDER INSIDE CLOSURE

DETAIL "A"