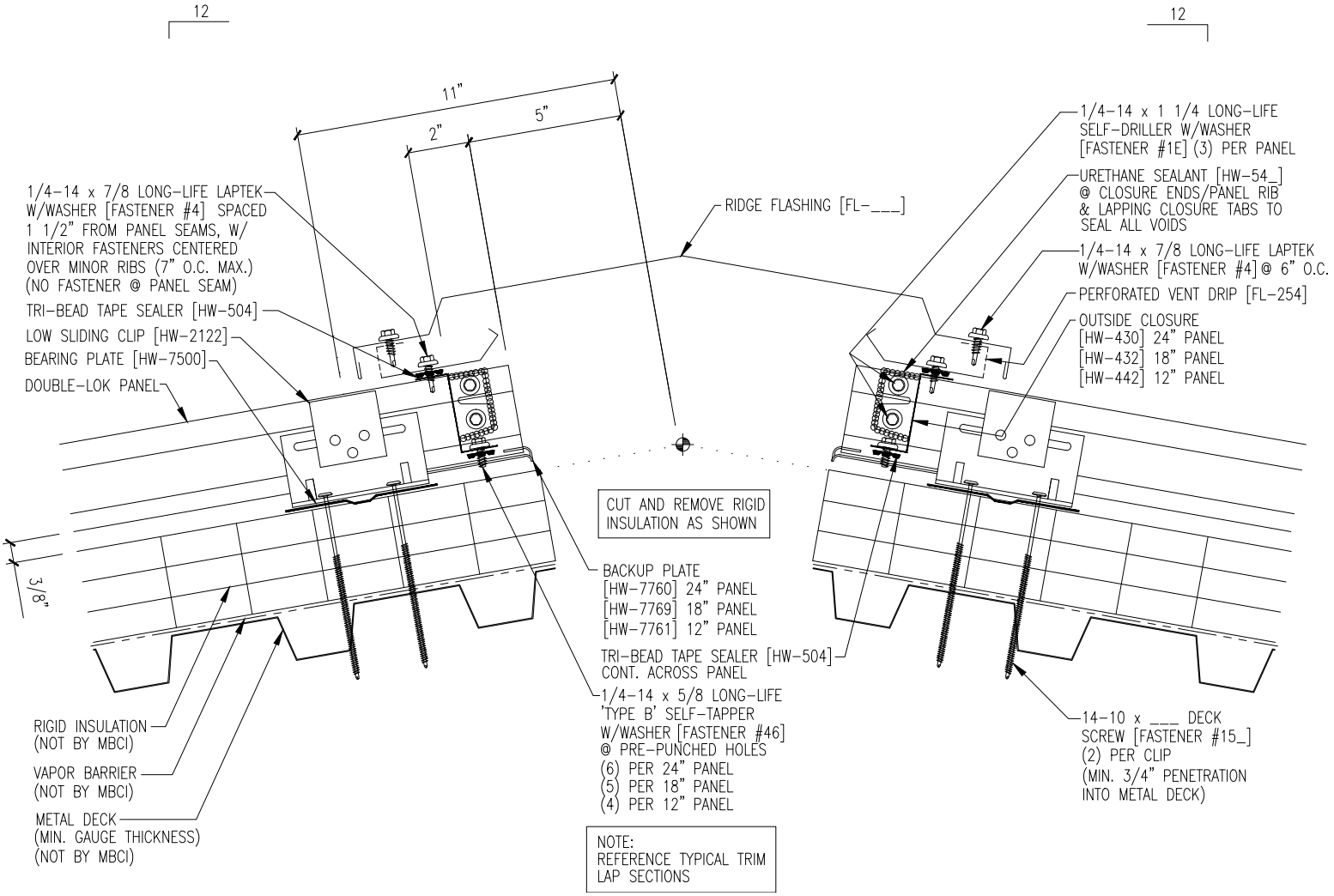
12
12
11"
2"
5"
1/4-14 x 7/8 LONG-LIFE LAPTEK W/WASHER [FASTENER #4] SPACED 1 1/2" FROM PANEL SEAMS, W/ INTERIOR FASTENERS CENTERED OVER MINOR RIBS (7" O.C. MAX.) (NO FASTENER @ PANEL SEAM)
TRI-BEAD TAPE SEALER [HW-504]
LOW SLIDING CLIP [HW-2122]
BEARING PLATE [HW-7500]
DOUBLE-LOK PANEL
RIDGE FLASHING [FL-___]
1/4-14 x 1 1/4 LONG-LIFE SELF-DRILLER W/WASHER [FASTENER #1E] (3) PER PANEL
URETHANE SEALANT [HW-54_] @ CLOSURE ENDS/PANEL RIB & LAPPING CLOSURE TABS TO SEAL ALL VOIDS
1/4-14 x 7/8 LONG-LIFE LAPTEK W/WASHER [FASTENER #4] @ 6" O.C.
PERFORATED VENT DRIP [FL-254]
OUTSIDE CLOSURE
[HW-430] 24" PANEL
[HW-432] 18" PANEL
[HW-442] 12" PANEL
CUT AND REMOVE RIGID INSULATION AS SHOWN
3/8"
BACKUP PLATE
[HW-7760] 24" PANEL
[HW-7769] 18" PANEL
[HW-7761] 12" PANEL
TRI-BEAD TAPE SEALER [HW-504] CONT. ACROSS PANEL
1/4-14 x 5/8 LONG-LIFE 'TYPE B' SELF-TAPPER W/WASHER [FASTENER #46] @ PRE-PUNCHED HOLES
(6) PER 24" PANEL
(5) PER 18" PANEL
(4) PER 12" PANEL
RIGID INSULATION (NOT BY MBCI)
VAPOR BARRIER (NOT BY MBCI)
METAL DECK (MIN. GAUGE THICKNESS) (NOT BY MBCI)
14-10 x ___ DECK SCREW [FASTENER #15_] (2) PER CLIP (MIN. 3/4" PENETRATION INTO METAL DECK)
NOTE:
REFERENCE TYPICAL TRIM LAP SECTIONS