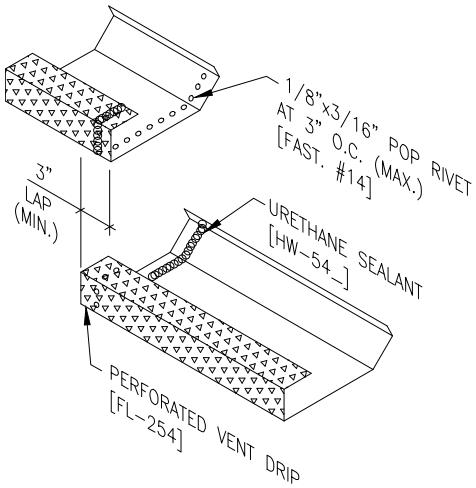
1/8"x3/16" POP RIVET
AT 3" O.C. (MAX.)
[FAST. #14]
3"
LAP
(MIN.)
URETHANE SEALANT
[HW-54_]
PERFORATED VENT DRIP
[FL-254]

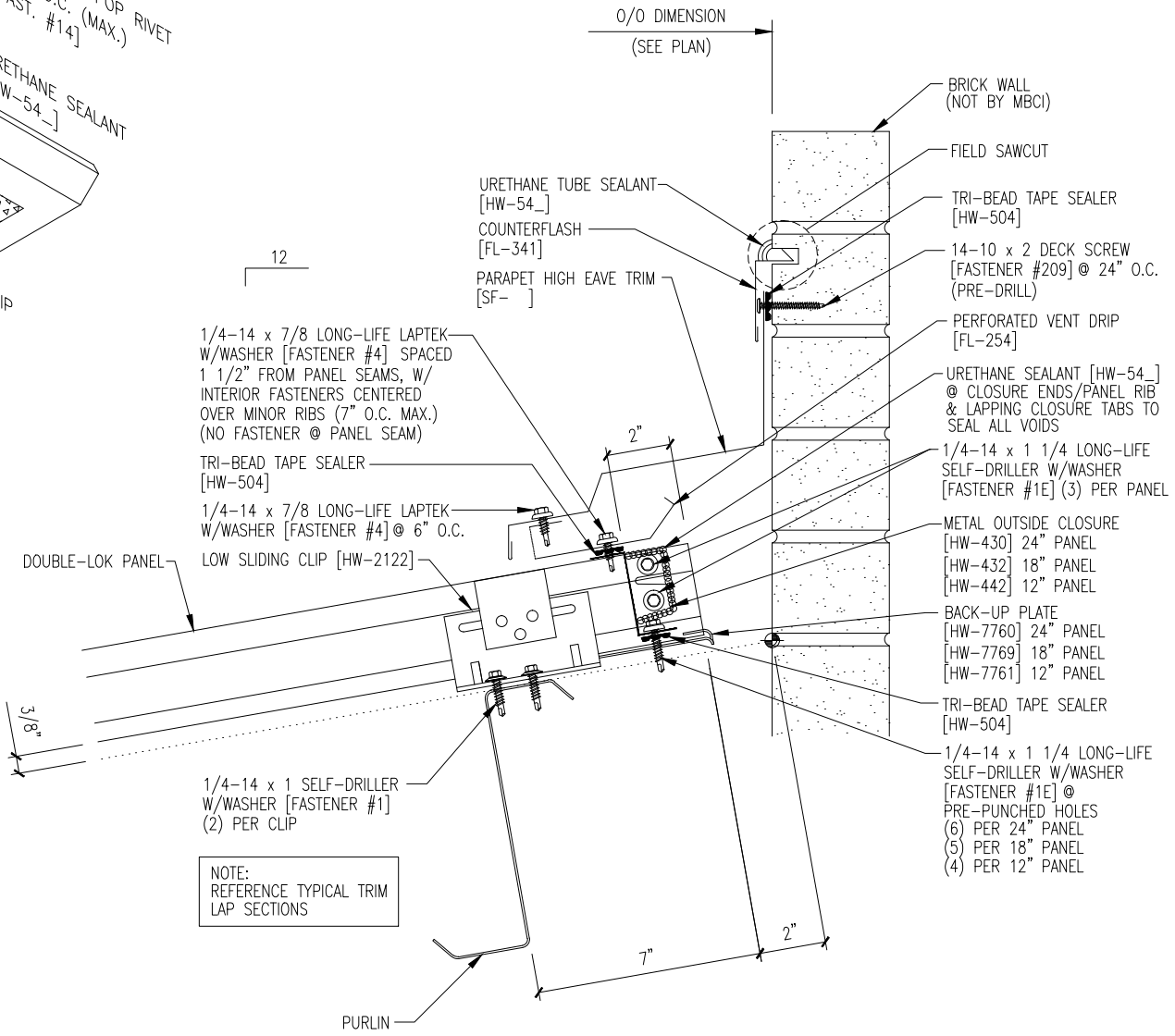
O/O DIMENSION
(SEE PLAN)
BRICK WALL
(NOT BY MBCI)
FIELD SAWCUT
URETHANE TUBE SEALANT
[HW-54_]
TRI-BEAD TAPE SEALER
[HW-504]
COUNTERFLASH
[FL-341]
14-10 x 2 DECK SCREW
[FASTENER #209] @ 24" O.C.
(PRE-DRILL)
12
PARAPET HIGH EAVE TRIM
[SF-]
PERFORATED VENT DRIP
[FL-254]
1/4-14 x 7/8 LONG-LIFE LAPTEK
W/WASHER [FASTENER #4] SPACED
1 1/2" FROM PANEL SEAMS, W/
INTERIOR FASTENERS CENTERED
OVER MINOR RIBS (7" O.C. MAX.)
(NO FASTENER @ PANEL SEAM)
URETHANE SEALANT [HW-54_]
@ CLOSURE ENDS/PANEL RIB
& LAPPING CLOSURE TABS TO
SEAL ALL VOIDS
2"
TRI-BEAD TAPE SEALER
[HW-504]
1/4-14 x 1 1/4 LONG-LIFE
SELF-DRILLER W/WASHER
[FASTENER #1E] (3) PER PANEL
1/4-14 x 7/8 LONG-LIFE LAPTEK
W/WASHER [FASTENER #4] @ 6" O.C.
METAL OUTSIDE CLOSURE
[HW-430] 24" PANEL
[HW-432] 18" PANEL
[HW-442] 12" PANEL
DOUBLE-LOK PANEL
LOW SLIDING CLIP [HW-2122]
BACK-UP PLATE
[HW-7760] 24" PANEL
[HW-7769] 18" PANEL
[HW-7761] 12" PANEL
3/8"
TRI-BEAD TAPE SEALER
[HW-504]
1/4-14 x 1 1/4 LONG-LIFE
SELF-DRILLER W/WASHER
[FASTENER #1E] @
PRE-PUNCHED HOLES
(6) PER 24" PANEL
(5) PER 18" PANEL
(4) PER 12" PANEL
1/4-14 x 1 SELF-DRILLER
W/WASHER [FASTENER #1]
(2) PER CLIP
NOTE:
REFERENCE TYPICAL TRIM
LAP SECTIONS
2"
7"
PURLIN