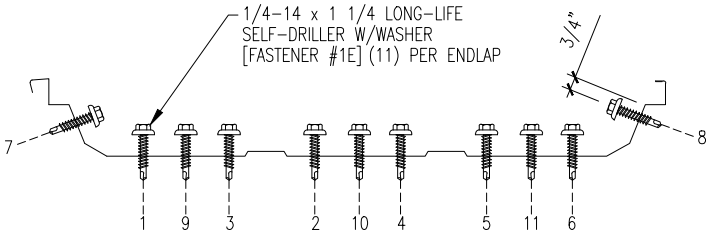

FASTENER SEQUENCE @ ENDLAP

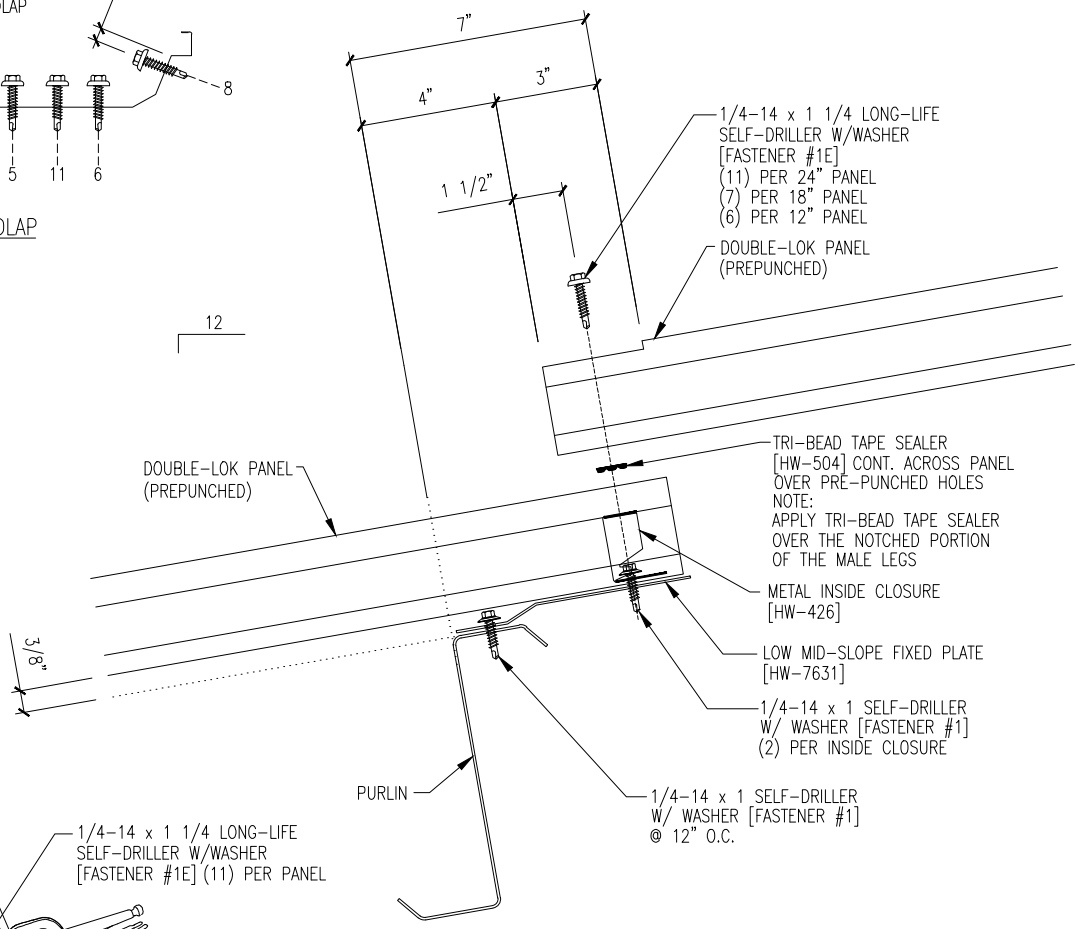

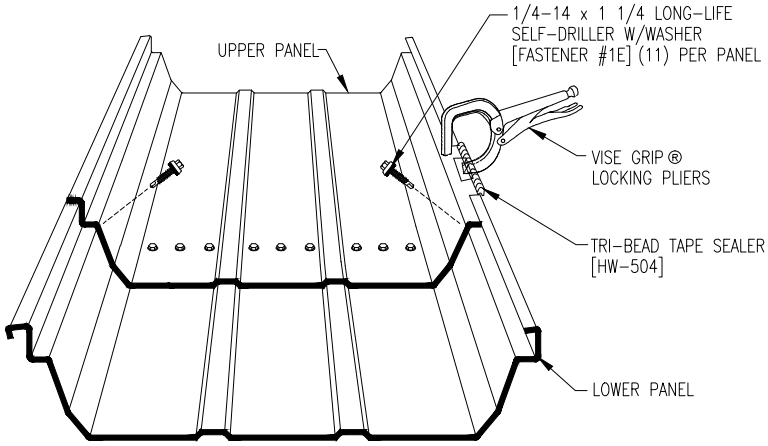

PANEL INSTALLATION SEQUENCE