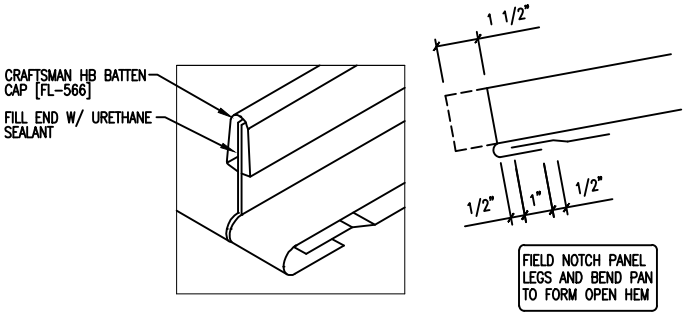

PANEL ENGAGEMENT DETAIL

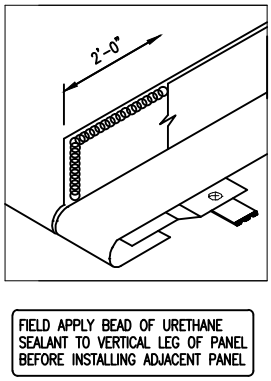
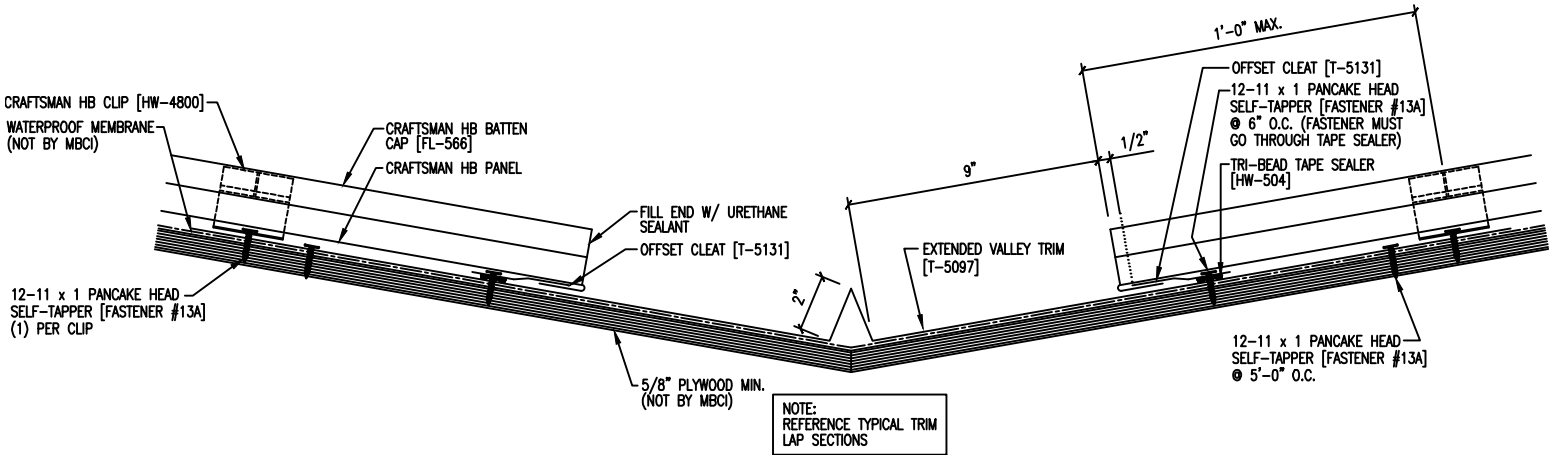
VALLEY SEALANT DETAIL