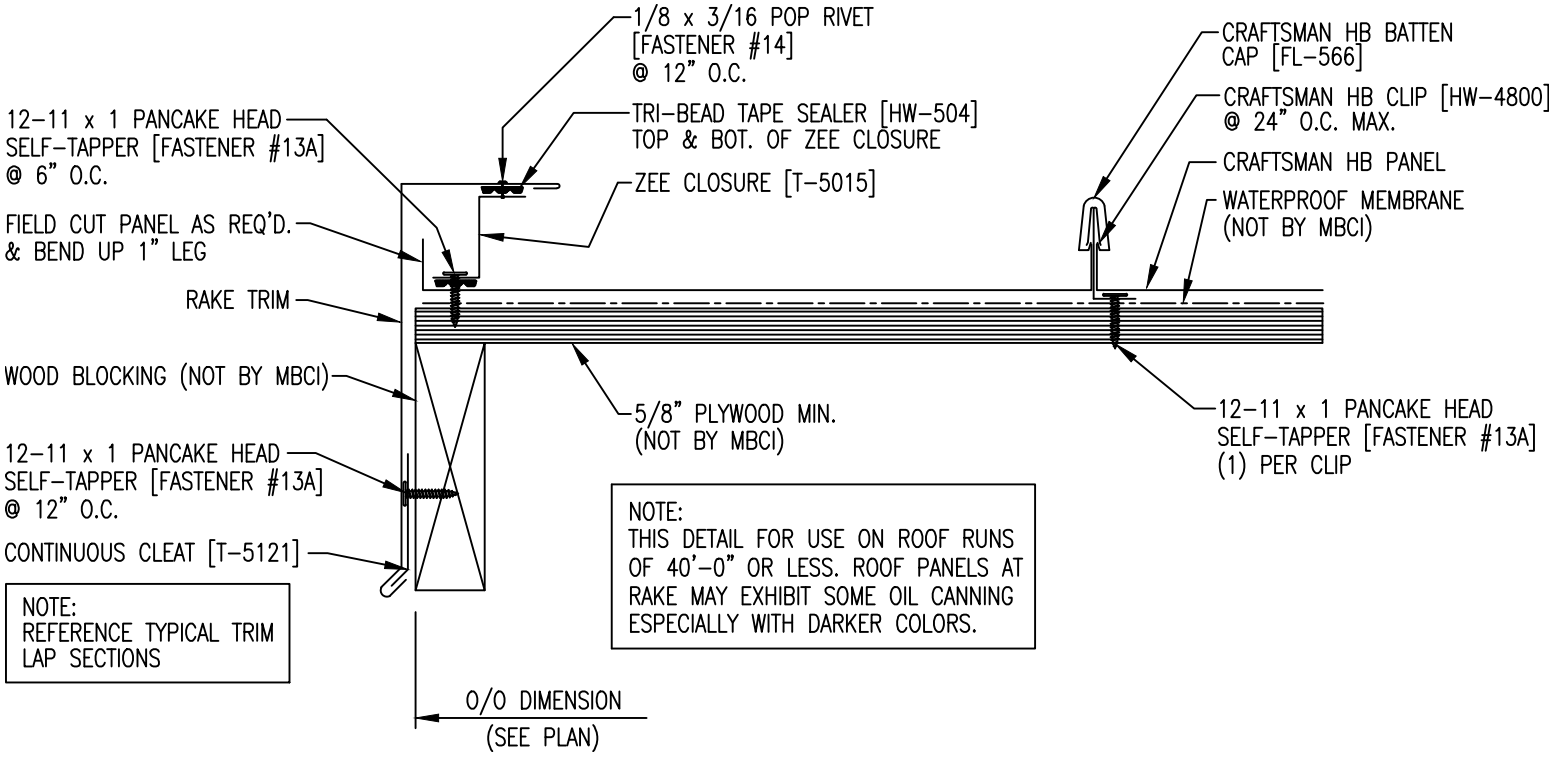
1/8 x 3/16 POP RIVET
[FASTENER #14]
@ 12" O.C.
TRI-BEAD TAPE SEALER [HW-504]
TOP & BOT. OF ZEE CLOSURE
ZEE CLOSURE [T-5015]
12-11 x 1 PANCAKE HEAD
SELF-TAPPER [FASTENER #13A]
@ 6" O.C.
FIELD CUT PANEL AS REQ'D.
& BEND UP 1" LEG
RAKE TRIM
WOOD BLOCKING (NOT BY MBCI)
12-11 x 1 PANCAKE HEAD
SELF-TAPPER [FASTENER #13A]
@ 12" O.C.
CONTINUOUS CLEAT [T-5121]
5/8" PLYWOOD MIN.
(NOT BY MBCI)
CRAFTSMAN HB BATTEN
CAP [FL-566]
CRAFTSMAN HB CLIP [HW-4800]
@ 24" O.C. MAX.
CRAFTSMAN HB PANEL
WATERPROOF MEMBRANE
(NOT BY MBCI)
12-11 x 1 PANCAKE HEAD
SELF-TAPPER [FASTENER #13A]
(1) PER CLIP
NOTE:
REFERENCE TYPICAL TRIM
LAP SECTIONS
NOTE:
THIS DETAIL FOR USE ON ROOF RUNS
OF 40'-0" OR LESS. ROOF PANELS AT
RAKE MAY EXHIBIT SOME OIL CANNING
ESPECIALLY WITH DARKER COLORS.
O/O DIMENSION
(SEE PLAN)