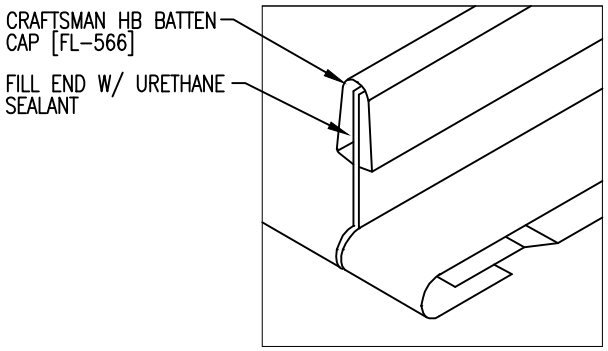

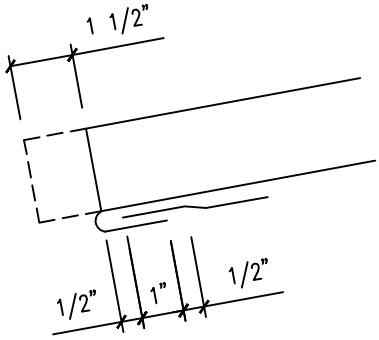

FIELD NOTCH PANEL LEGS AND BEND PAN TO FORM OPEN HEM

PANEL ENGAGEMENT DETAIL

12

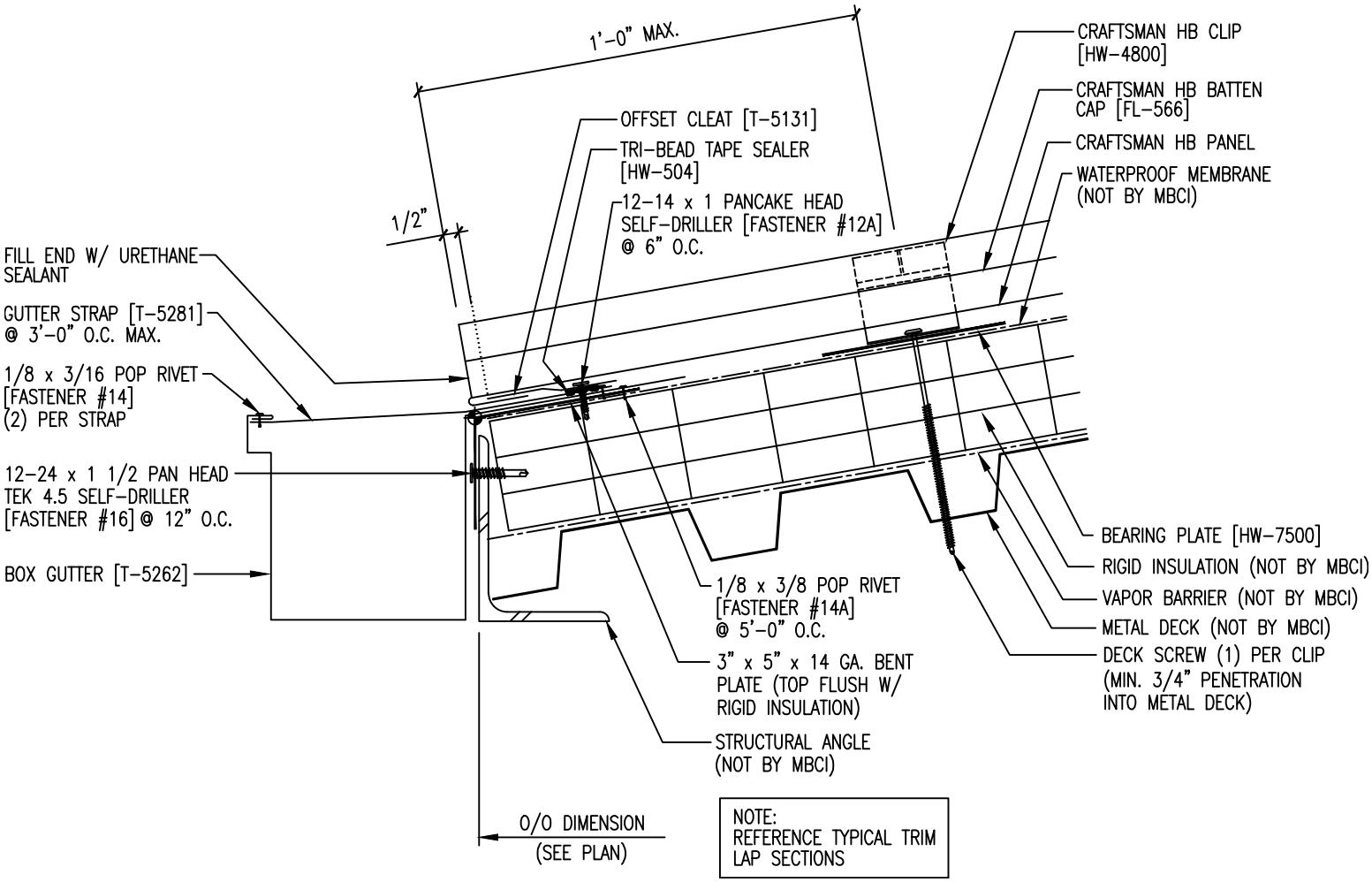

NOTE:
REFERENCE TYPICAL TRIM LAP SECTIONS