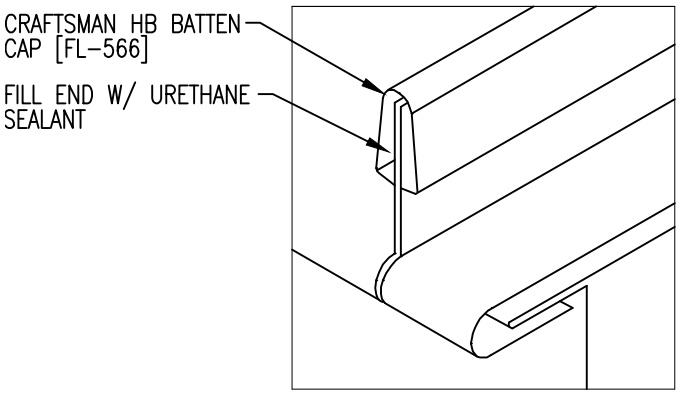

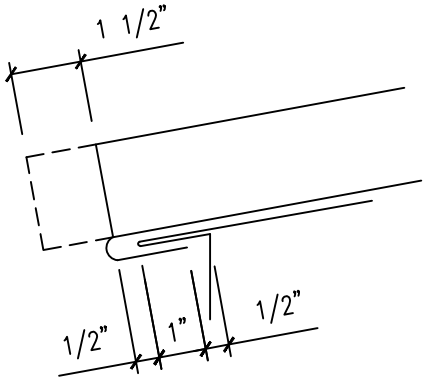

FIELD NOTCH PANEL LEGS AND BEND PAN TO FORM OPEN HEM

PANEL ENGAGEMENT DETAIL

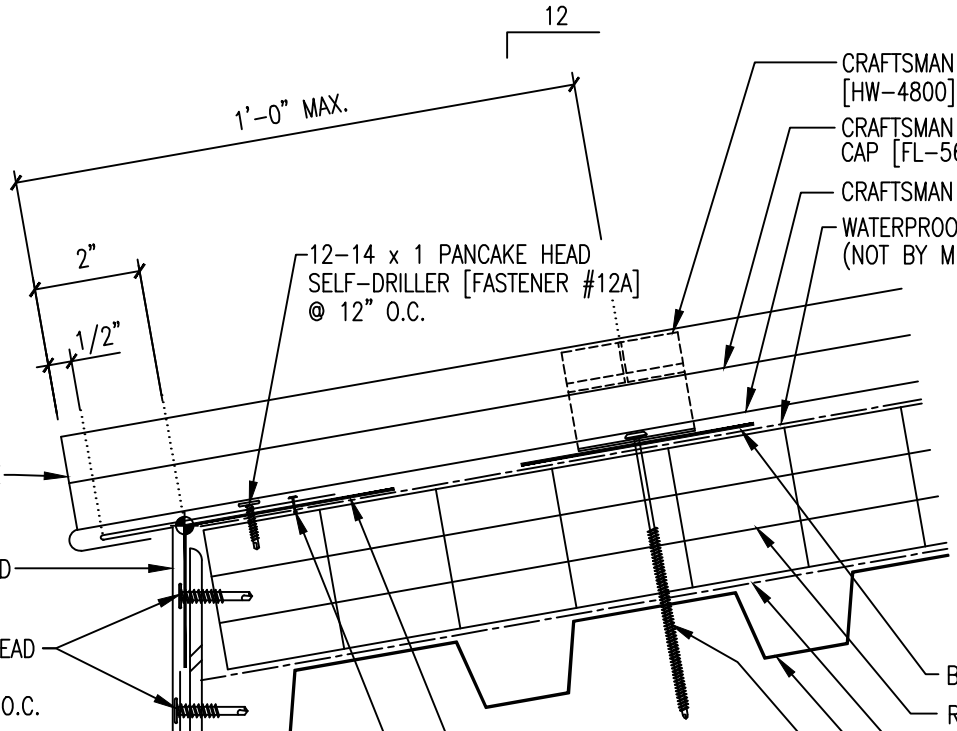

NOTE:
REFERENCE TYPICAL TRIM LAP SECTIONS

6:12 MAX. ROOF SLOPE