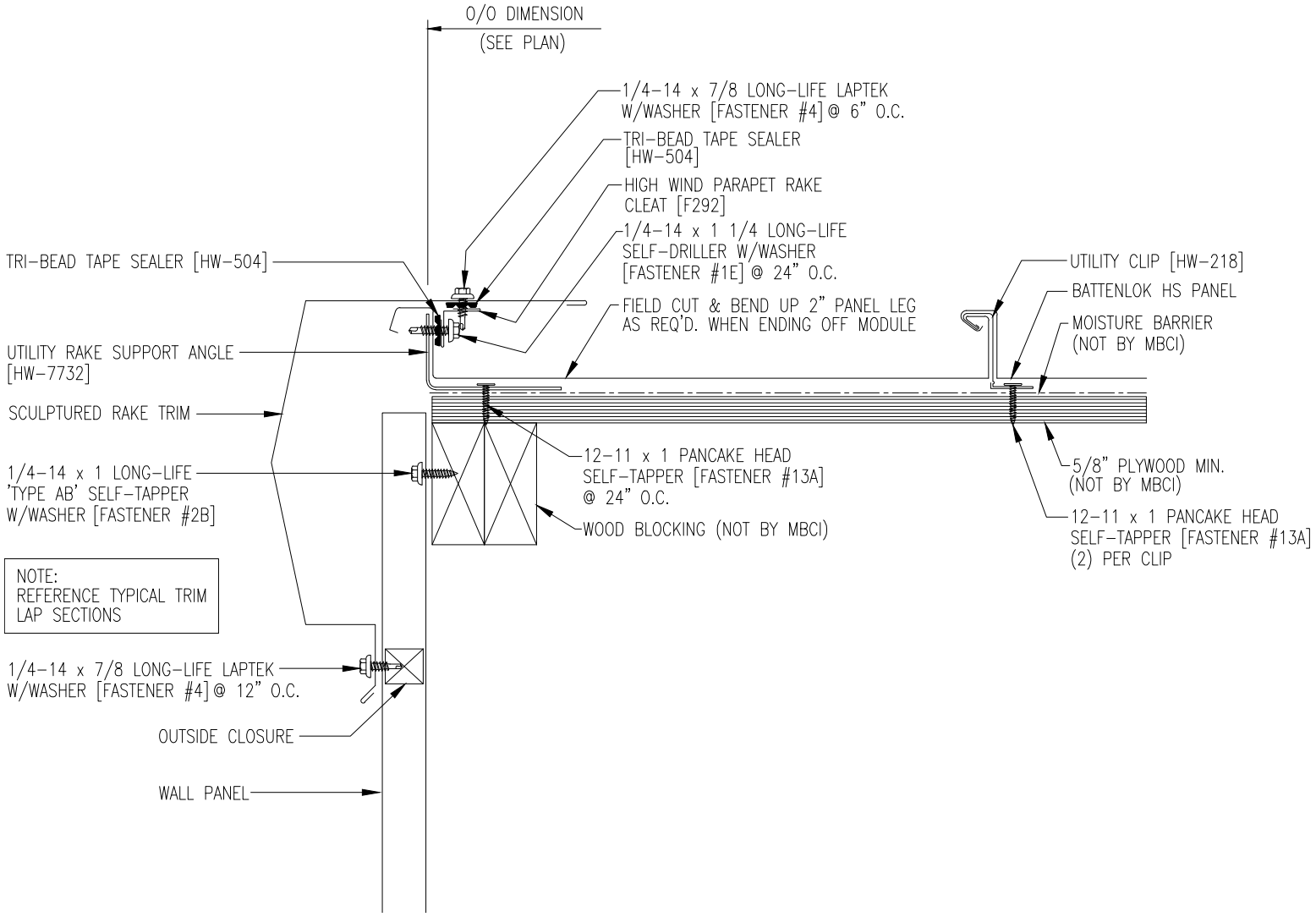
O/O DIMENSION
(SEE PLAN)
1/4-14 x 7/8 LONG-LIFE LAPTEK W/WASHER [FASTENER #4] @ 6" O.C.
TRI-BEAD TAPE SEALER [HW-504]
HIGH WIND PARAPET RAKE CLEAT [F292]
1/4-14 x 1 1/4 LONG-LIFE SELF-DRILLER W/WASHER [FASTENER #1E] @ 24" O.C.
TRI-BEAD TAPE SEALER [HW-504]
FIELD CUT & BEND UP 2" PANEL LEG AS REQ'D. WHEN ENDING OFF MODULE
UTILITY CLIP [HW-218]
BATTENLOK HS PANEL
MOISTURE BARRIER (NOT BY MBCI)
UTILITY RAKE SUPPORT ANGLE [HW-7732]
SCULPTURED RAKE TRIM
1/4-14 x 1 LONG-LIFE 'TYPE AB' SELF-TAPPER W/WASHER [FASTENER #2B]
12-11 x 1 PANCAKE HEAD SELF-TAPPER [FASTENER #13A] @ 24" O.C.
WOOD BLOCKING (NOT BY MBCI)
5/8" PLYWOOD MIN. (NOT BY MBCI)
12-11 x 1 PANCAKE HEAD SELF-TAPPER [FASTENER #13A] (2) PER CLIP
NOTE:
REFERENCE TYPICAL TRIM LAP SECTIONS
1/4-14 x 7/8 LONG-LIFE LAPTEK W/WASHER [FASTENER #4] @ 12" O.C.
OUTSIDE CLOSURE
WALL PANEL