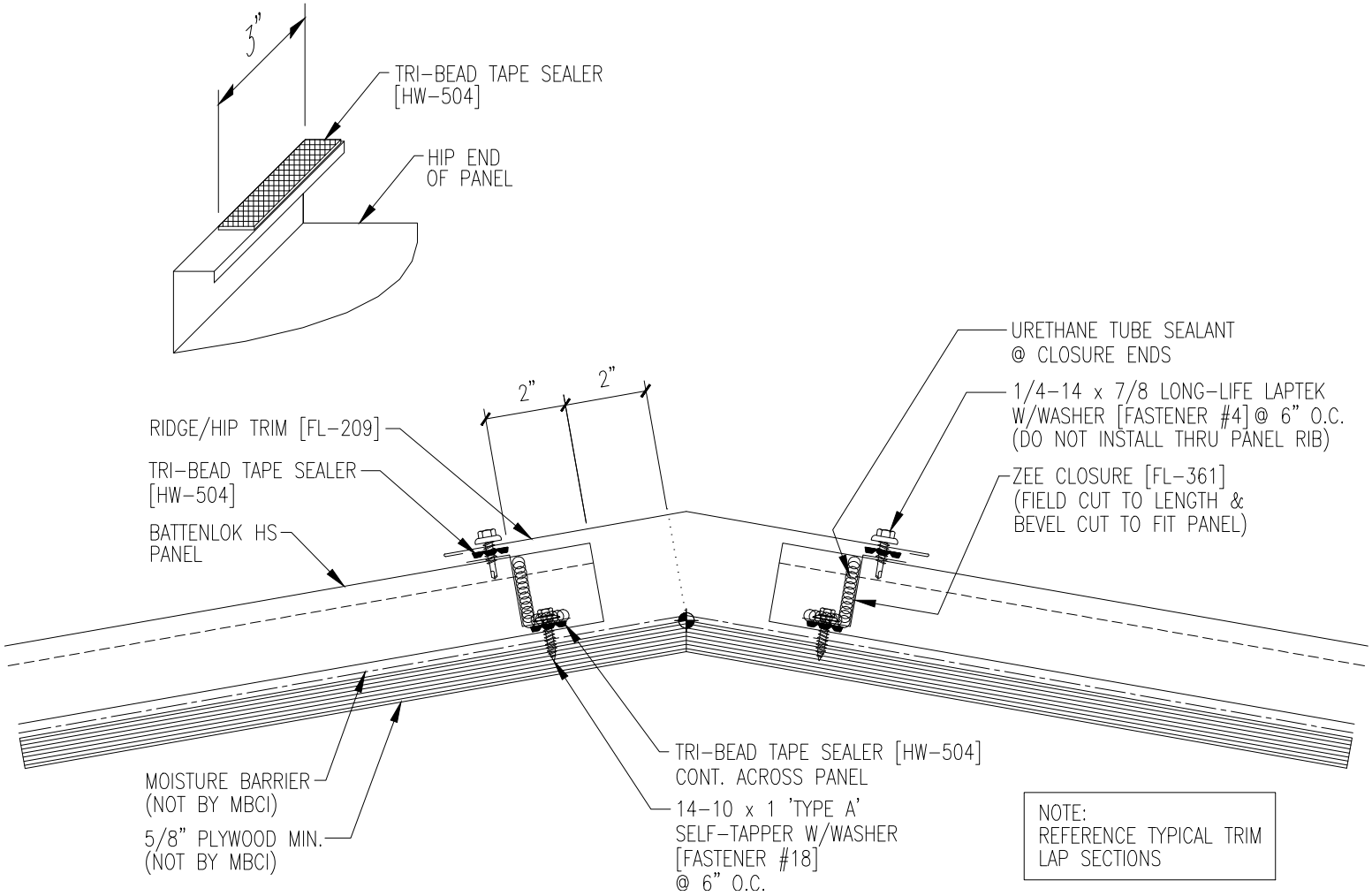
3"
TRI-BEAD TAPE SEALER
[HW-504]
HIP END
OF PANEL
URETHANE TUBE SEALANT
@ CLOSURE ENDS
2"
2"
1/4-14 x 7/8 LONG-LIFE LAPTEK
W/WASHER [FASTENER #4] @ 6" O.C.
(DO NOT INSTALL THRU PANEL RIB)
RIDGE/HIP TRIM [FL-209]
TRI-BEAD TAPE SEALER
[HW-504]
ZEE CLOSURE [FL-361]
(FIELD CUT TO LENGTH &
BEVEL CUT TO FIT PANEL)
BATTENLOK HS
PANEL
TRI-BEAD TAPE SEALER [HW-504]
CONT. ACROSS PANEL
MOISTURE BARRIER
(NOT BY MBCI)
14-10 x 1 'TYPE A'
SELF-TAPPER W/WASHER
[FASTENER #18]
@ 6" O.C.
5/8" PLYWOOD MIN.
(NOT BY MBCI)
NOTE:
REFERENCE TYPICAL TRIM
LAP SECTIONS