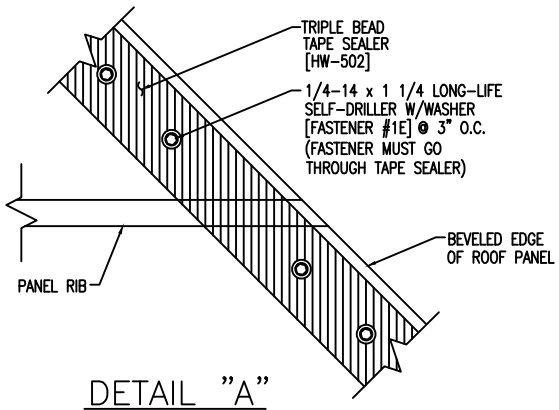

DETAIL "A"

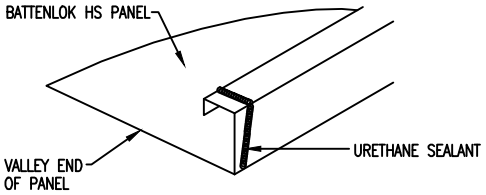

URETHANE SEALANT MUST COME
IN CONTACT WITH TAPE SEALER
TO FORM A WEATHERTIGHT SEAL

DETAIL "A"

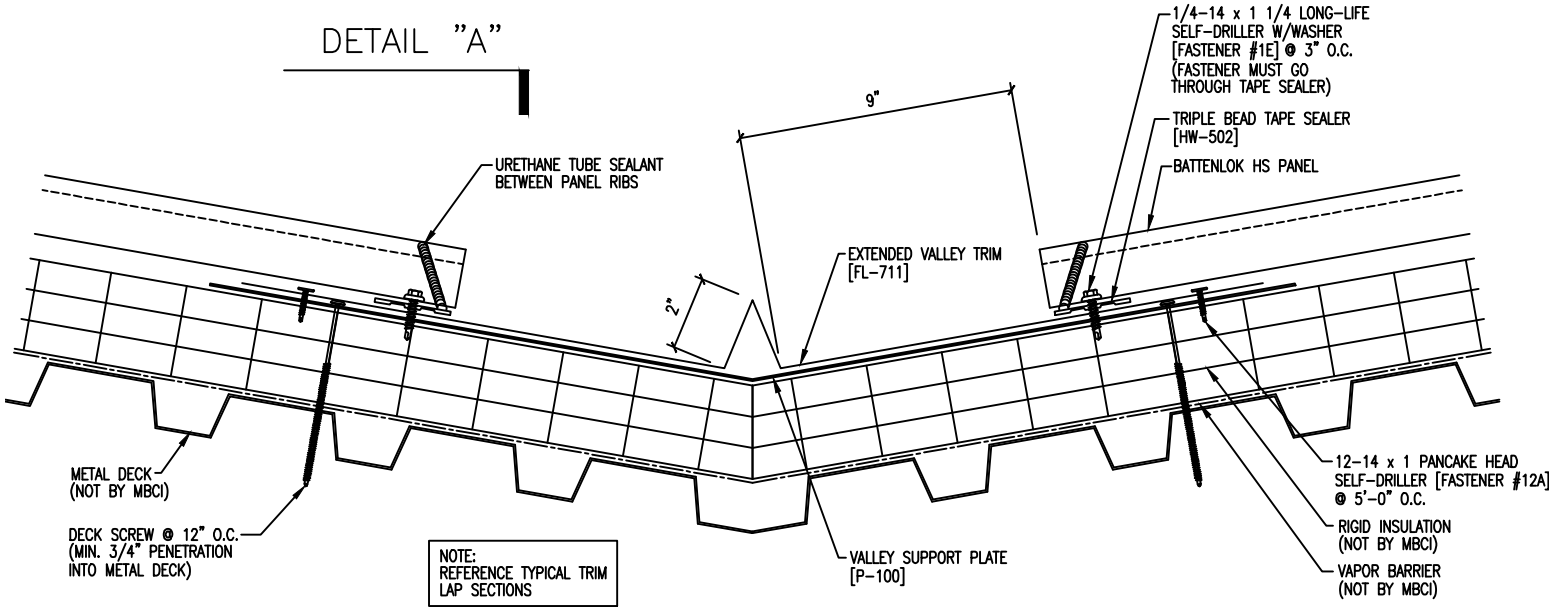

NOTE:
REFERENCE TYPICAL TRIM
LAP SECTIONS