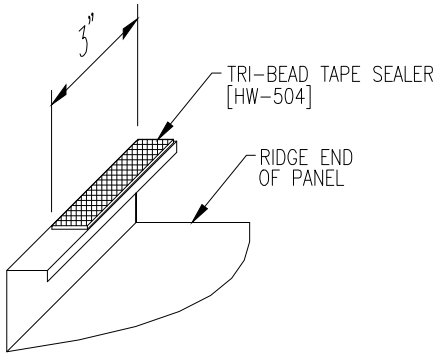
3"
TRI-BEAD TAPE SEALER
[HW-504]
RIDGE END
OF PANEL

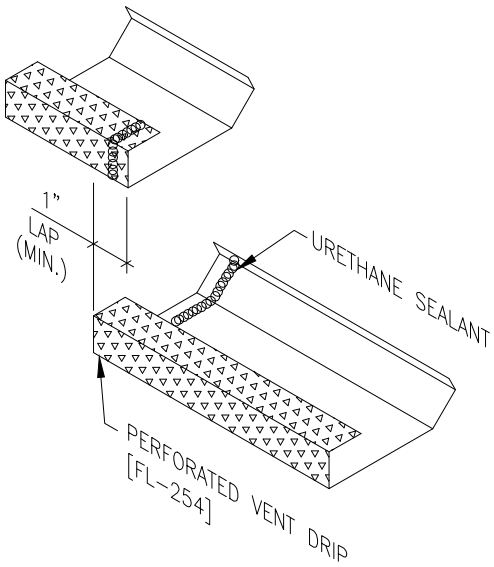
1"
LAP
(MIN.)
URETHANE SEALANT
PERFORATED VENT DRIP
[FL-254]

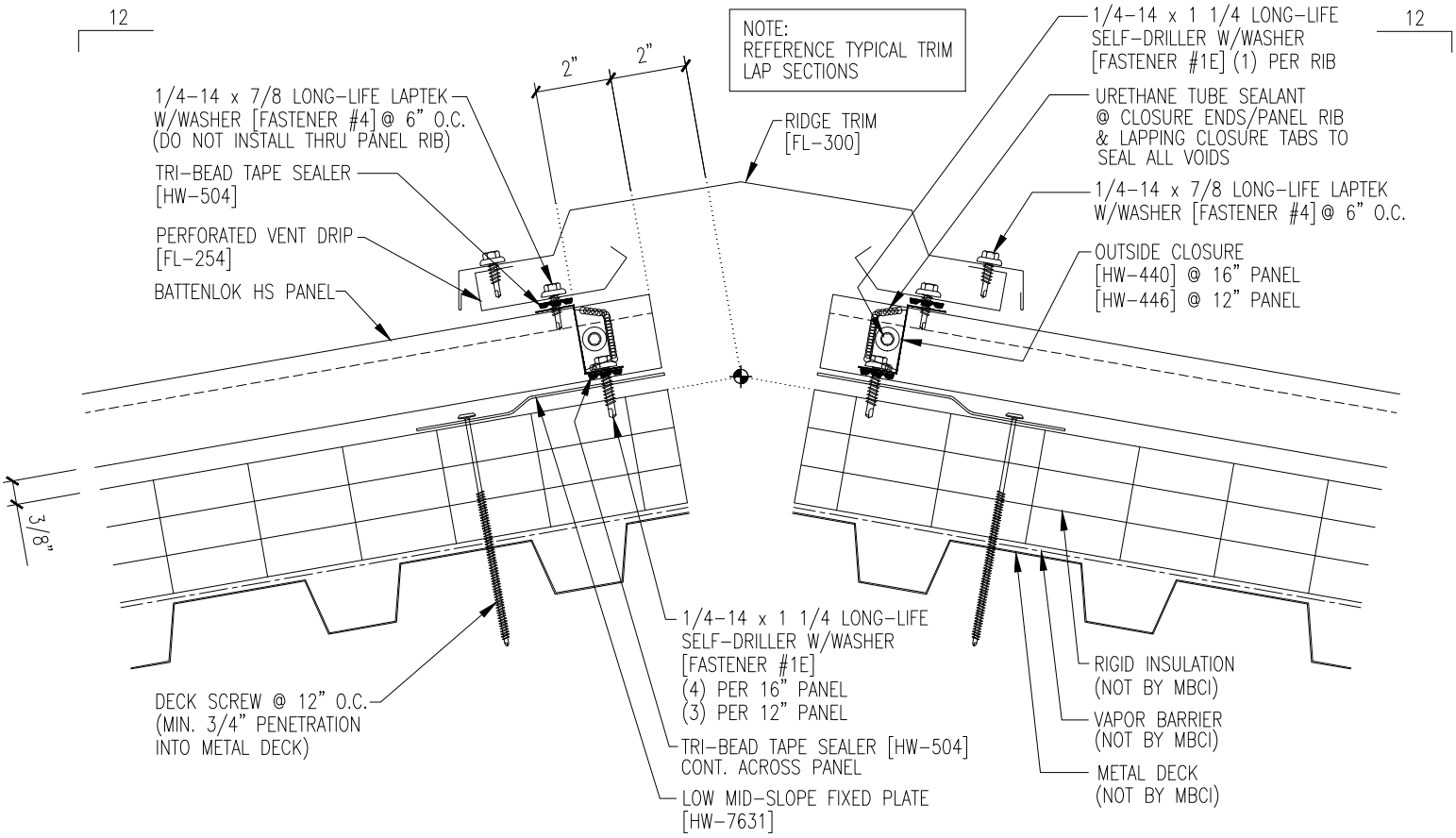
12
12
NOTE:
REFERENCE TYPICAL TRIM
LAP SECTIONS
2"
2"
1/4-14 x 7/8 LONG-LIFE LAPTEK
W/WASHER [FASTENER #4] @ 6" O.C.
(DO NOT INSTALL THRU PANEL RIB)
TRI-BEAD TAPE SEALER
[HW-504]
PERFORATED VENT DRIP
[FL-254]
BATTENLOK HS PANEL
RIDGE TRIM
[FL-300]
1/4-14 x 1 1/4 LONG-LIFE
SELF-DRILLER W/WASHER
[FASTENER #1E] (1) PER RIB
URETHANE TUBE SEALANT
@ CLOSURE ENDS/PANEL RIB
& LAPPING CLOSURE TABS TO
SEAL ALL VOIDS
1/4-14 x 7/8 LONG-LIFE LAPTEK
W/WASHER [FASTENER #4] @ 6" O.C.
OUTSIDE CLOSURE
[HW-440] @ 16" PANEL
[HW-446] @ 12" PANEL
3/8"
DECK SCREW @ 12" O.C.
(MIN. 3/4" PENETRATION
INTO METAL DECK)
1/4-14 x 1 1/4 LONG-LIFE
SELF-DRILLER W/WASHER
[FASTENER #1E]
(4) PER 16" PANEL
(3) PER 12" PANEL
TRI-BEAD TAPE SEALER [HW-504]
CONT. ACROSS PANEL
LOW MID-SLOPE FIXED PLATE
[HW-7631]
RIGID INSULATION
(NOT BY MBCI)
VAPOR BARRIER
(NOT BY MBCI)
METAL DECK
(NOT BY MBCI)