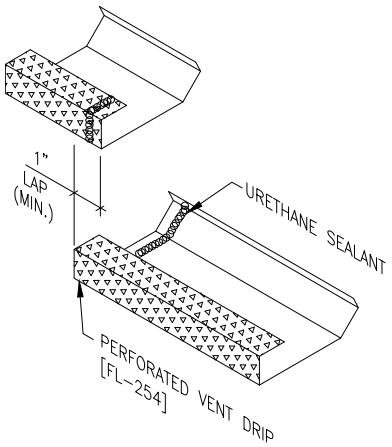

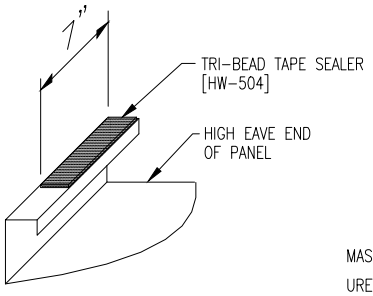
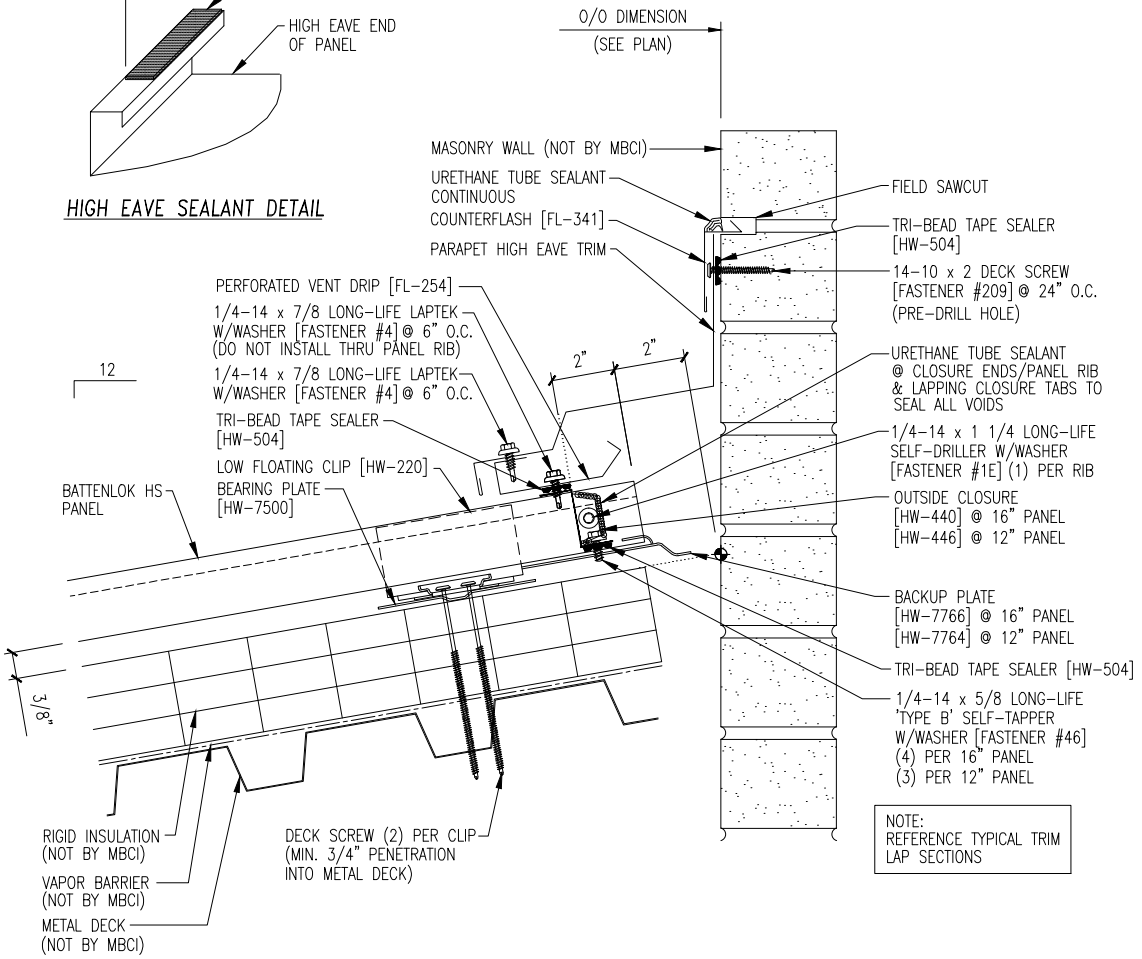
HIGH EAVE SEALANT DETAIL