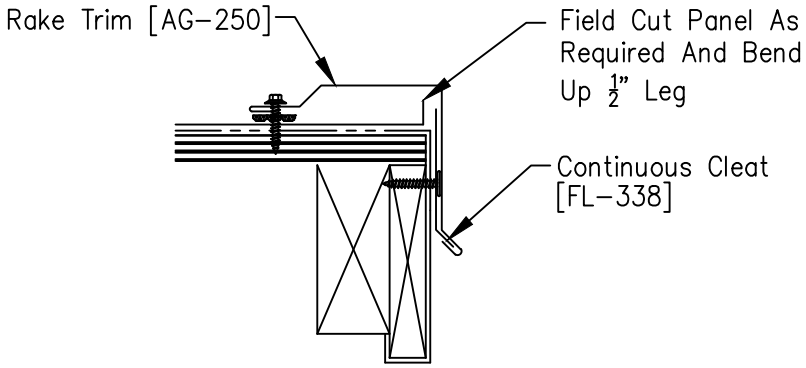
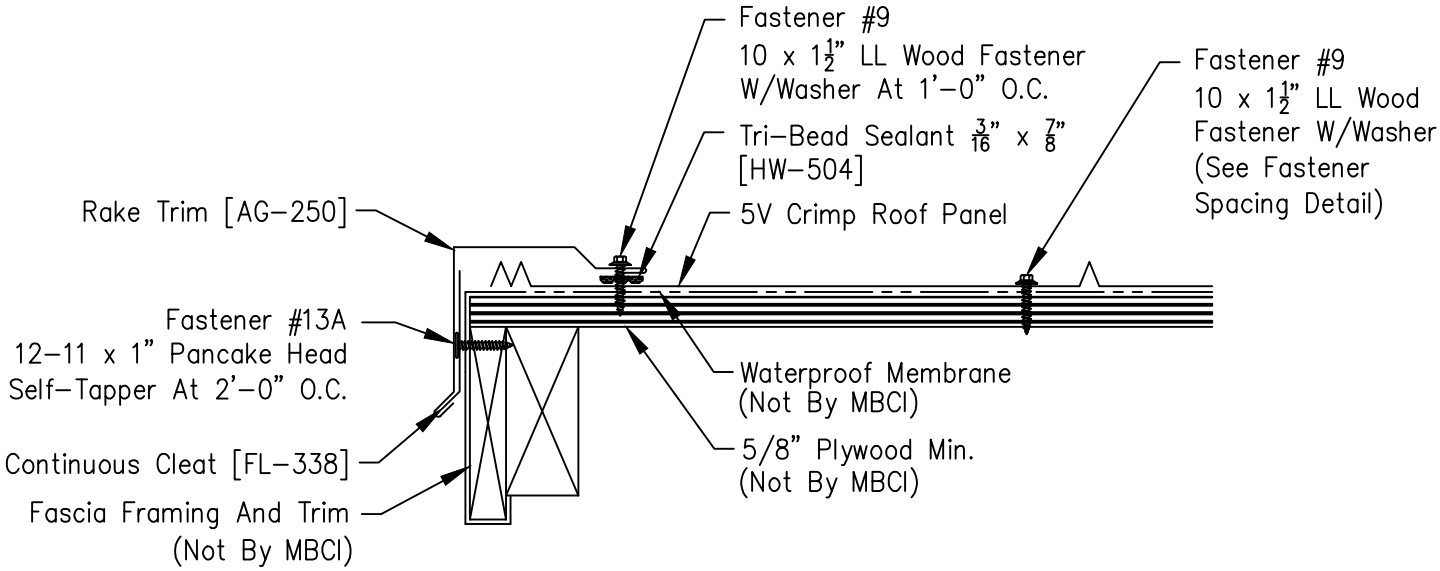
Finishing Off Module