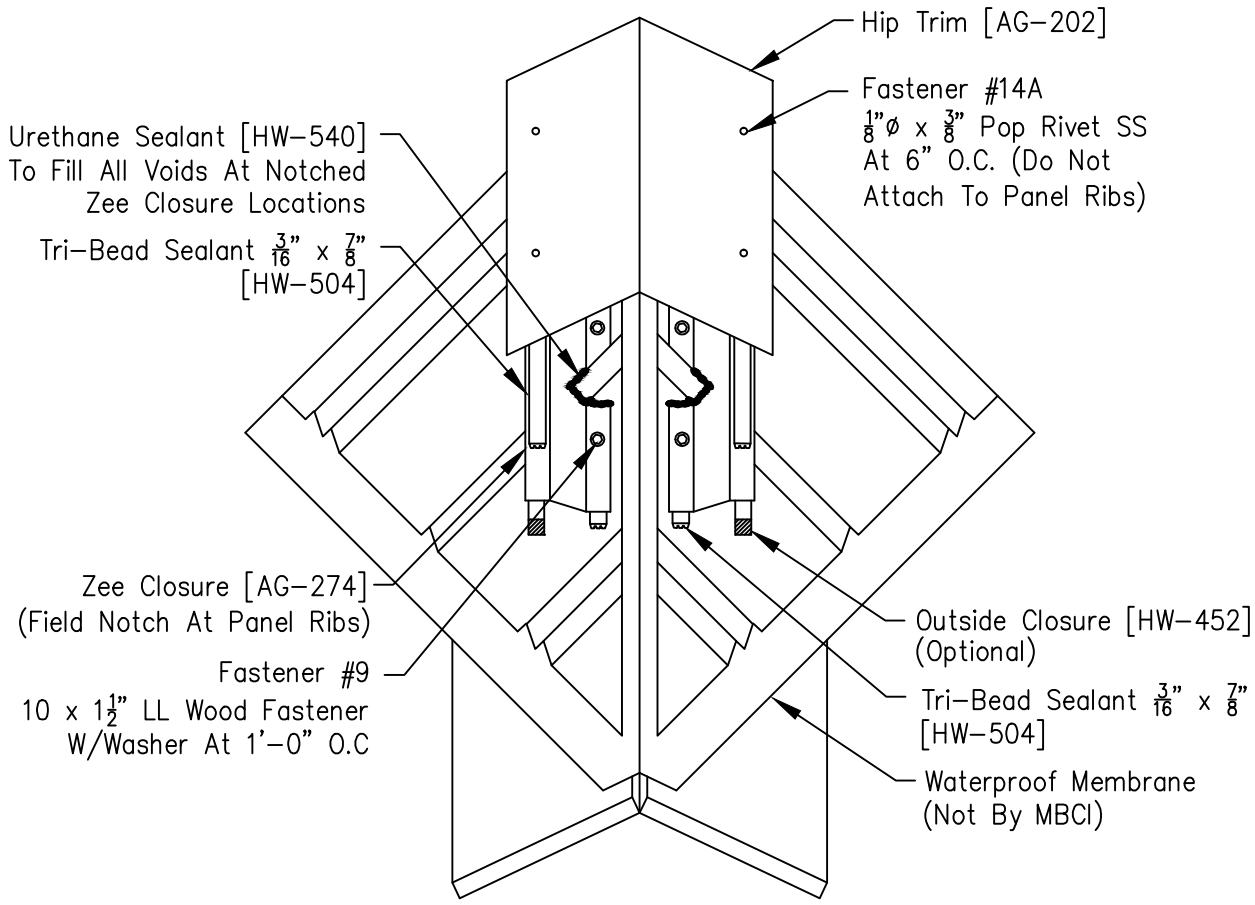
Hip Trim [AG–202]
Fastener #14A
$\frac{1}{8}$"ø x $\frac{3}{8}$" Pop Rivet SS
At 6" O.C. (Do Not
Attach To Panel Ribs)
Urethane Sealant [HW–540]
To Fill All Voids At Notched
Zee Closure Locations
Tri–Bead Sealant $\frac{3}{16}$" x $\frac{7}{8}$"
[HW–504]
Zee Closure [AG–274]
(Field Notch At Panel Ribs)
Fastener #9
10 x $1\frac{1}{2}$" LL Wood Fastener
W/Washer At 1'–0" O.C
Outside Closure [HW–452]
(Optional)
Tri–Bead Sealant $\frac{3}{16}$" x $\frac{7}{8}$"
[HW–504]
Waterproof Membrane
(Not By MBCI)

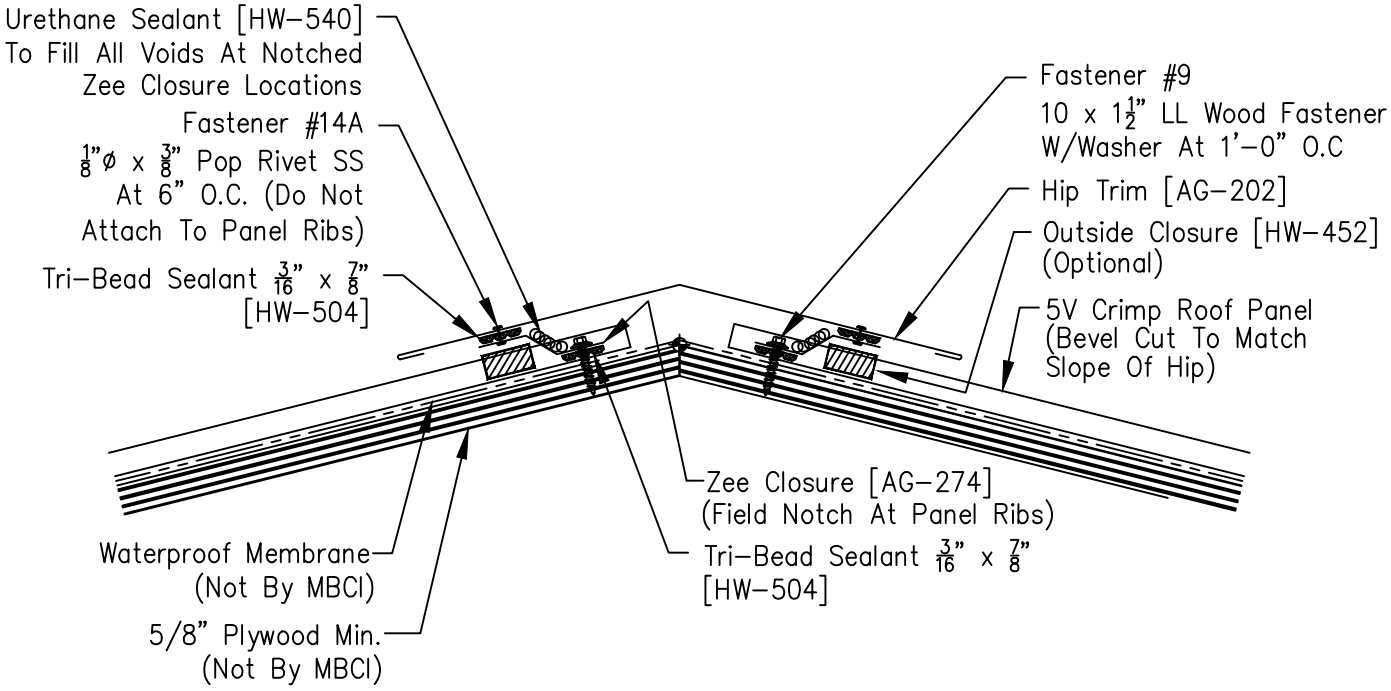
Urethane Sealant [HW–540]
To Fill All Voids At Notched
Zee Closure Locations
Fastener #14A
$\frac{1}{8}$"ø x $\frac{3}{8}$" Pop Rivet SS
At 6" O.C. (Do Not
Attach To Panel Ribs)
Tri–Bead Sealant $\frac{3}{16}$" x $\frac{7}{8}$"
[HW–504]
Fastener #9
10 x $1\frac{1}{2}$" LL Wood Fastener
W/Washer At 1'–0" O.C
Hip Trim [AG–202]
Outside Closure [HW–452]
(Optional)
5V Crimp Roof Panel
(Bevel Cut To Match
Slope Of Hip)
Zee Closure [AG–274]
(Field Notch At Panel Ribs)
Tri–Bead Sealant $\frac{3}{16}$" x $\frac{7}{8}$"
[HW–504]
Waterproof Membrane
(Not By MBCI)
5/8" Plywood Min.
(Not By MBCI)