MasterLine 16 Vertical Panel Termination

Page	
VML-TR-01	
Date	Rev
Mar '17	00

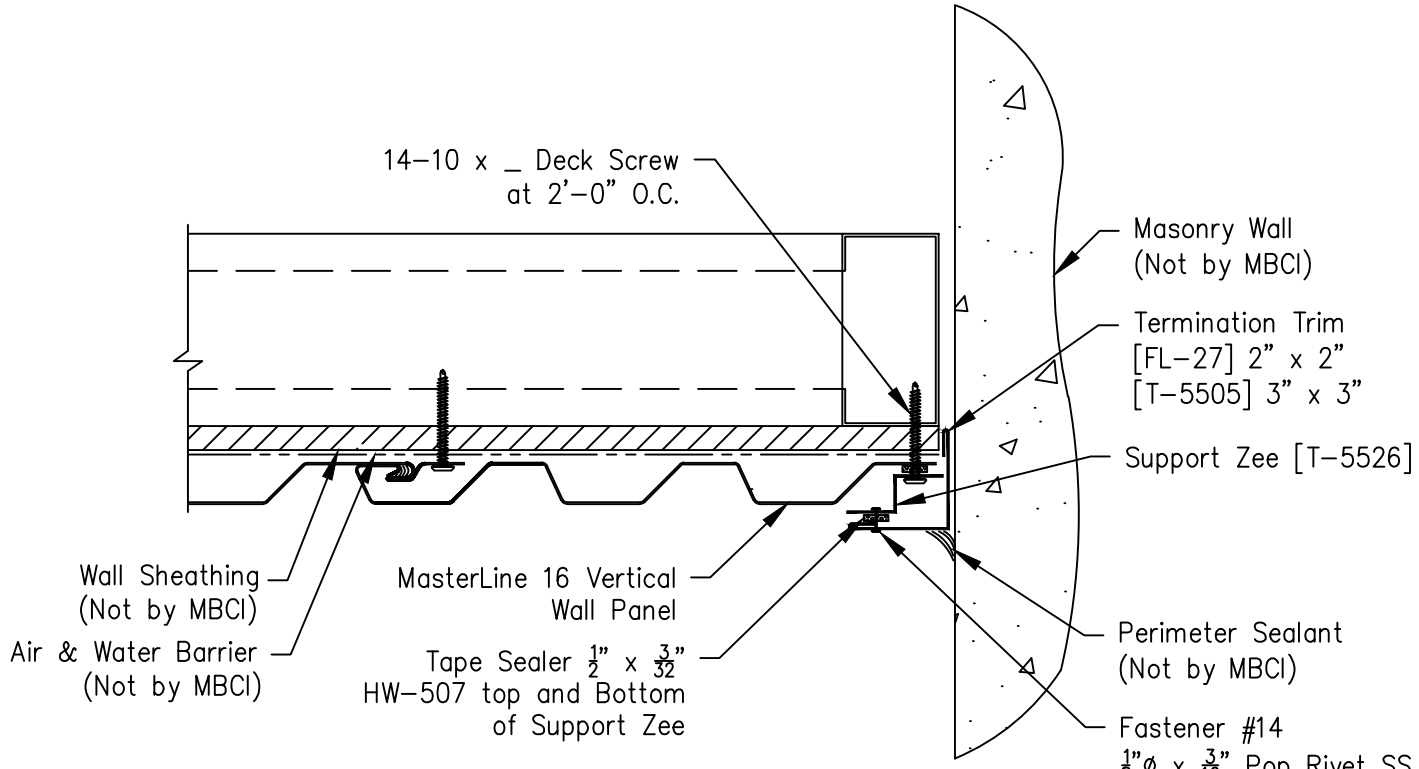

Finish in Low

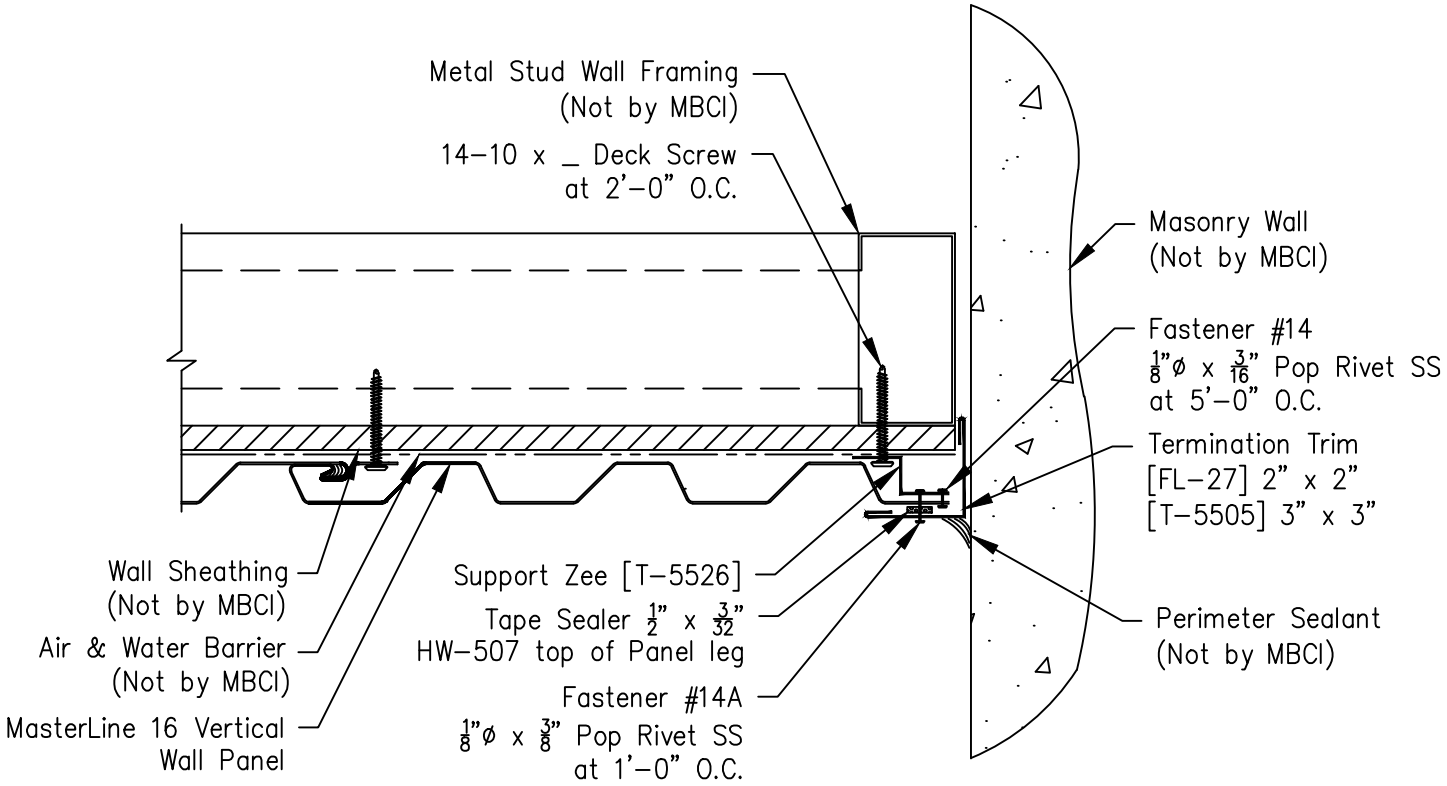

Finish in High