MasterLine 16 Vertical Panel
Eave With Artisan Soffit
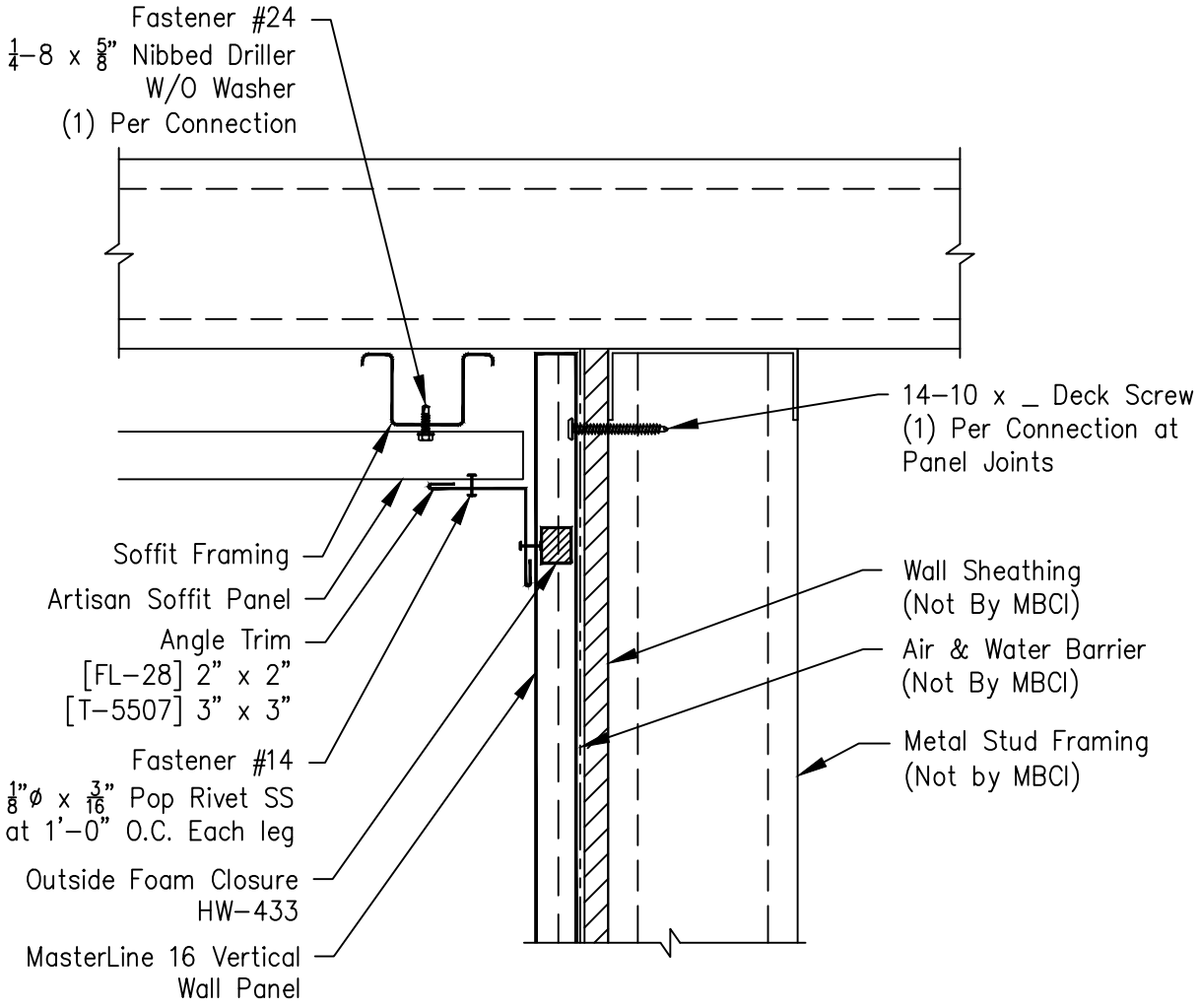
Page	
VML-SO-01	
Date	Rev
Mar '17	00