MasterLine 16 Vertical Panel
Window Jamb

Page	
VML-JB-02	
Date	Rev
Mar '17	00

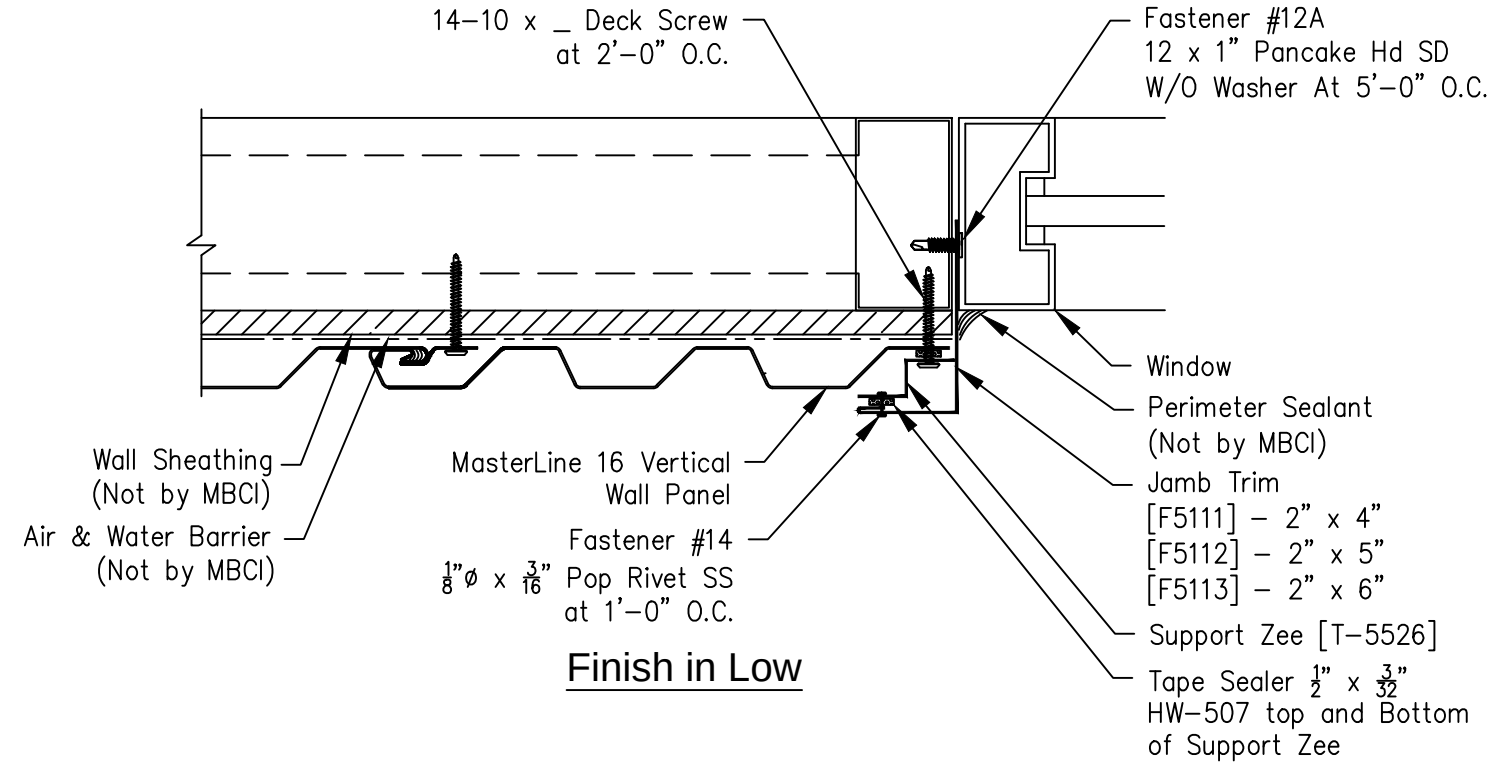

Finish in Low

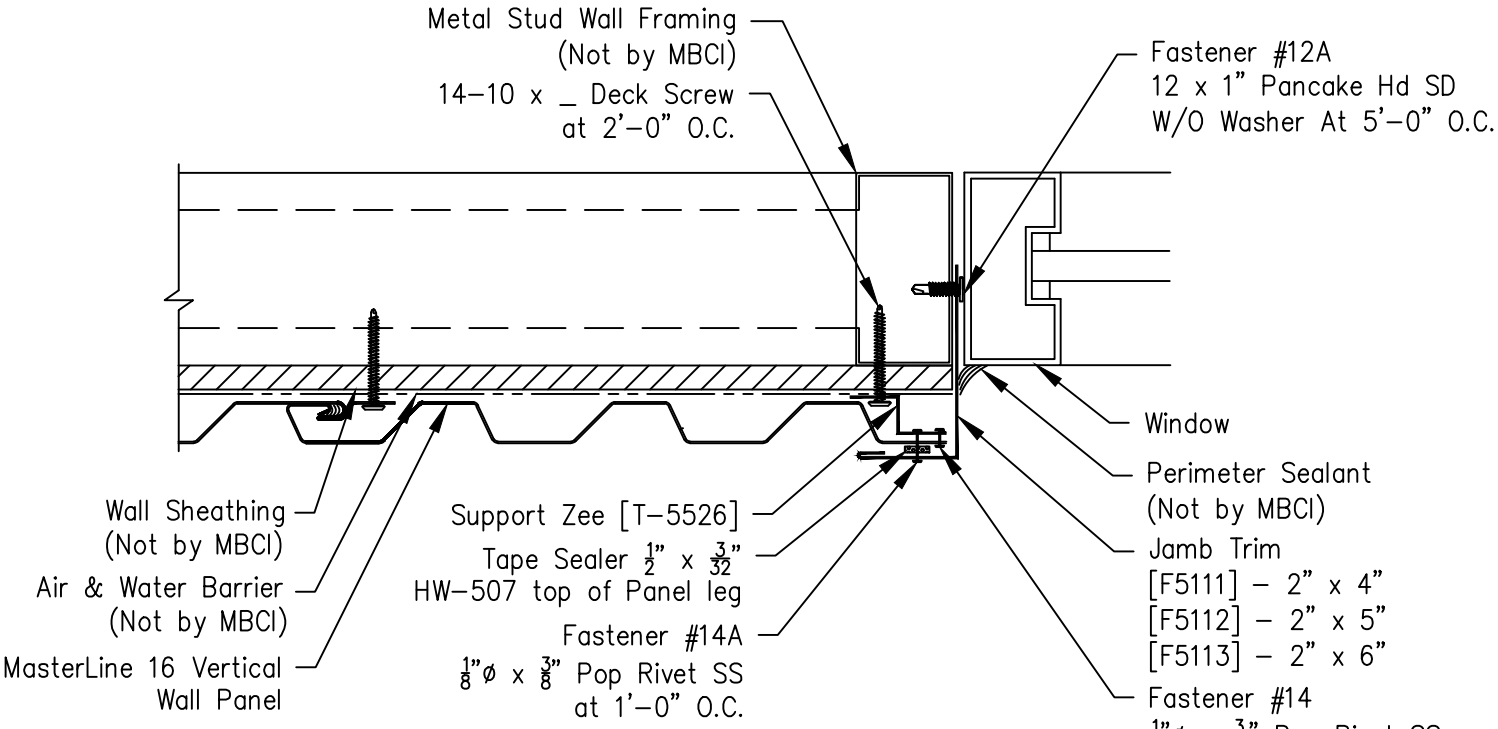

Finish in High