MasterLine 16 Vertical Panel
Window Head
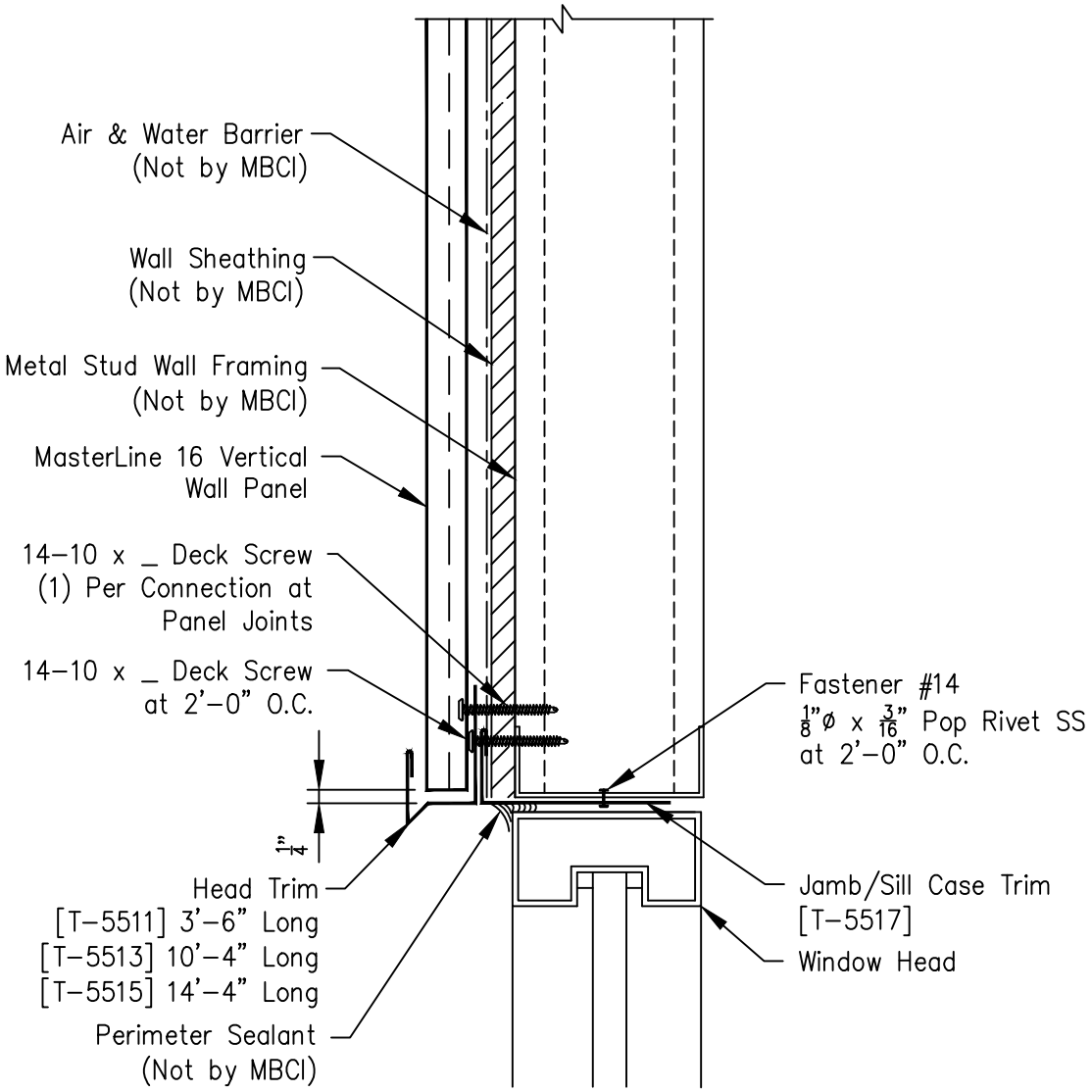
Page	
VML-HD-02	
Date	Rev
Mar '17	00