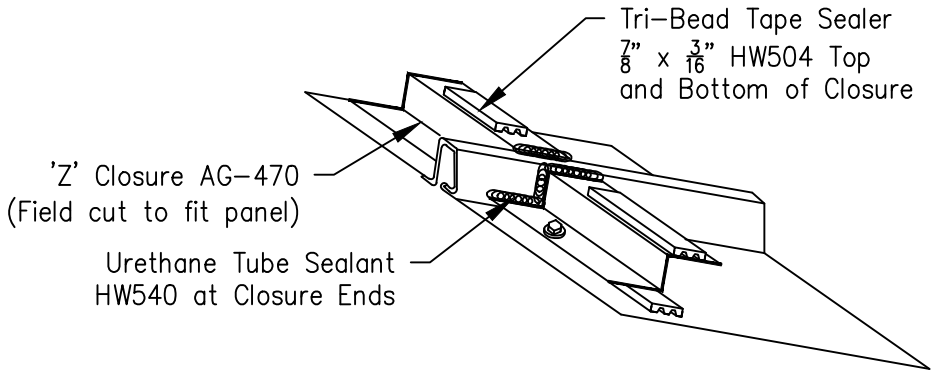
Tri–Bead Tape Sealer
7/8" x 3/16" HW504 Top
and Bottom of Closure
'Z' Closure AG–470
(Field cut to fit panel)
Urethane Tube Sealant
HW540 at Closure Ends

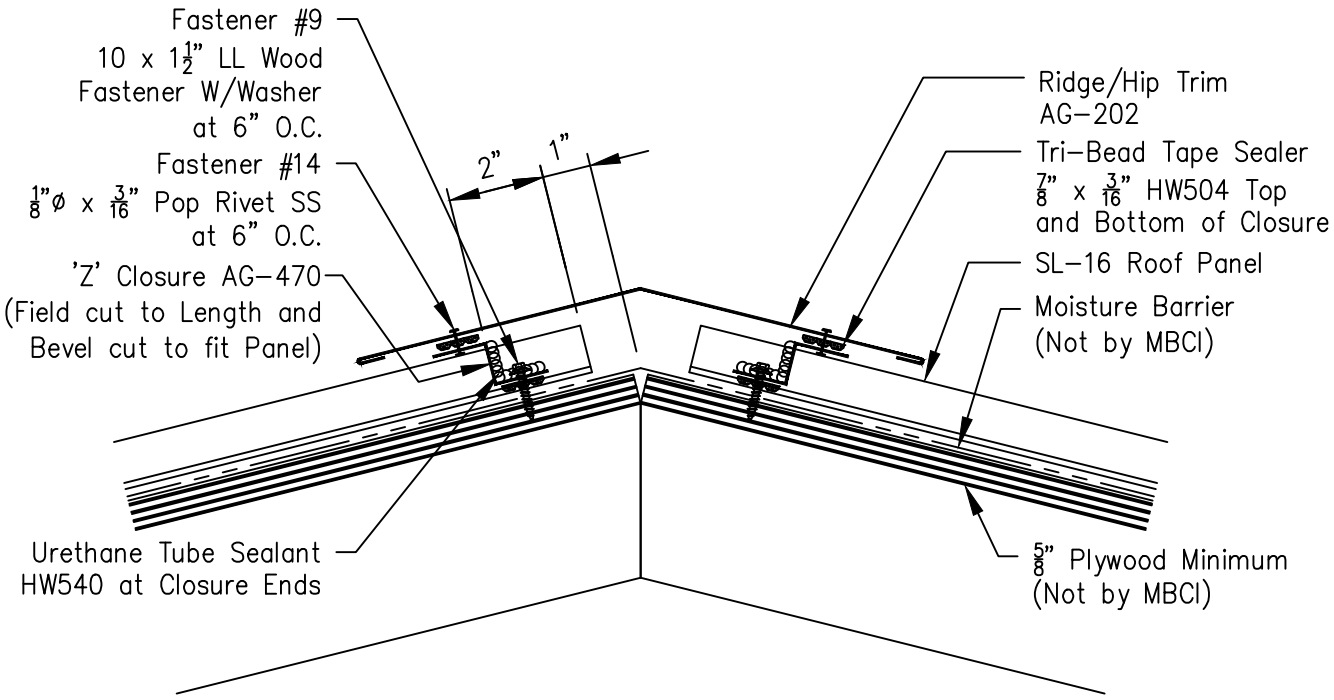
Fastener #9
10 x 1 1/2" LL Wood
Fastener W/Washer
at 6" O.C.
Fastener #14
1/8"ø x 3/16" Pop Rivet SS
at 6" O.C.
'Z' Closure AG–470
(Field cut to Length and
Bevel cut to fit Panel)
Urethane Tube Sealant
HW540 at Closure Ends
2"
1"
Ridge/Hip Trim
AG–202
Tri–Bead Tape Sealer
7/8" x 3/16" HW504 Top
and Bottom of Closure
SL–16 Roof Panel
Moisture Barrier
(Not by MBCI)
5/8" Plywood Minimum
(Not by MBCI)