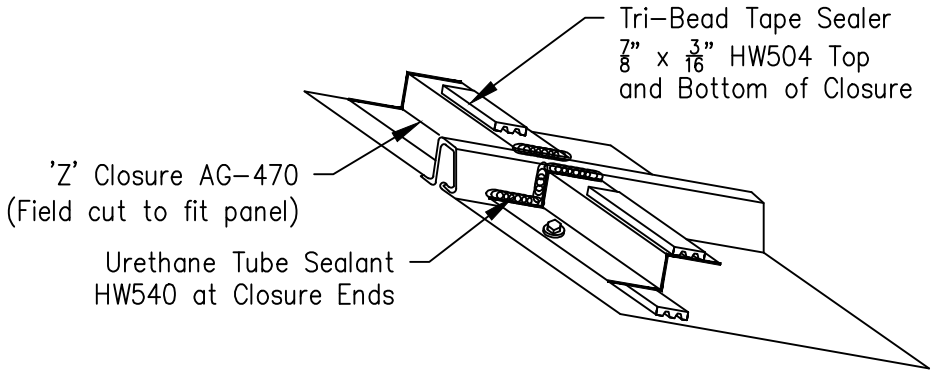
Tri–Bead Tape Sealer
7/8" x 3/16" HW504 Top
and Bottom of Closure
'Z' Closure AG–470
(Field cut to fit panel)
Urethane Tube Sealant
HW540 at Closure Ends

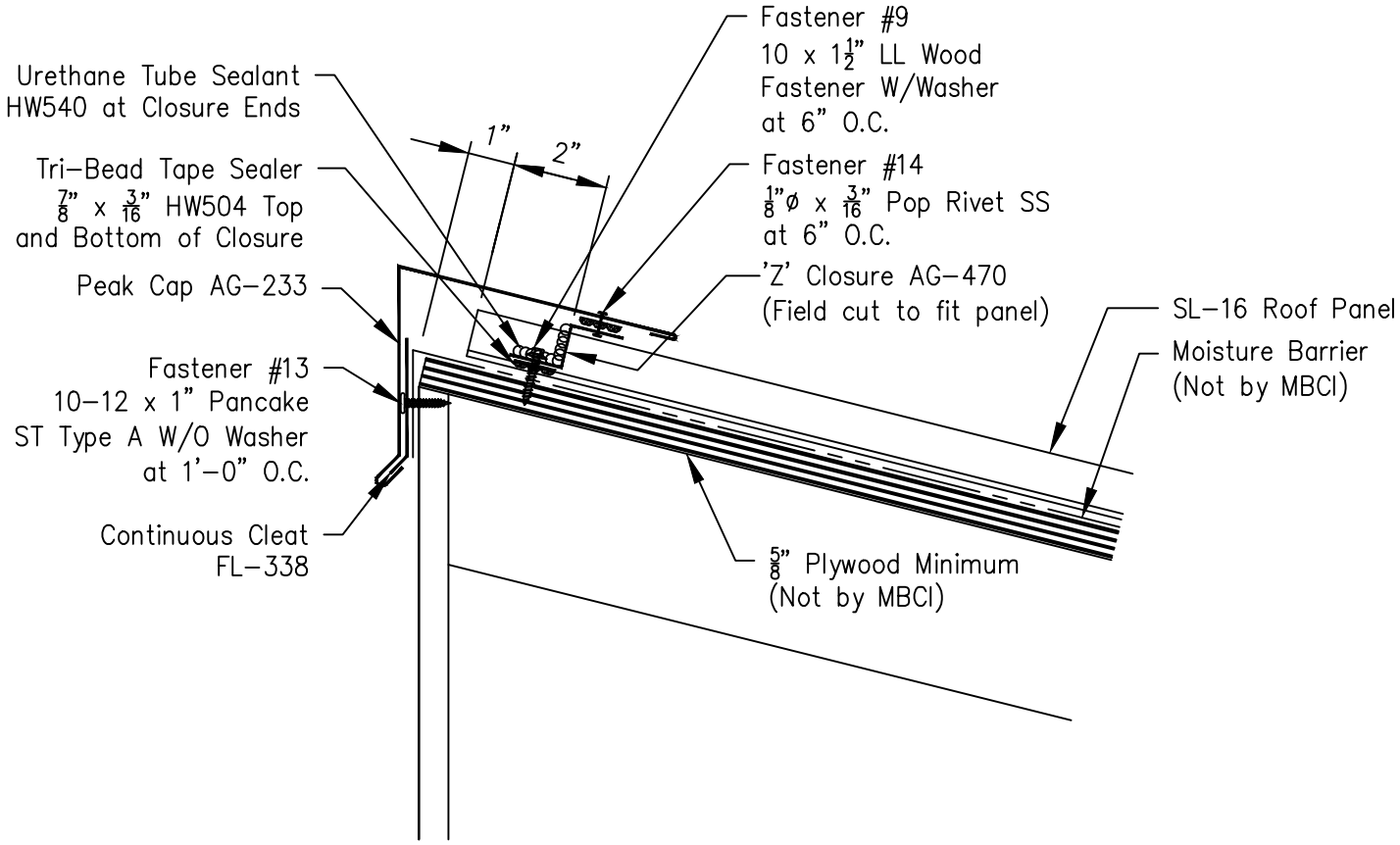
Urethane Tube Sealant
HW540 at Closure Ends
Tri–Bead Tape Sealer
7/8" x 3/16" HW504 Top
and Bottom of Closure
Peak Cap AG–233
Fastener #13
10–12 x 1" Pancake
ST Type A W/O Washer
at 1'–0" O.C.
Continuous Cleat
FL–338
1"
2"
Fastener #9
10 x 1 1/2" LL Wood
Fastener W/Washer
at 6" O.C.
Fastener #14
1/8"ø x 3/16" Pop Rivet SS
at 6" O.C.
'Z' Closure AG–470
(Field cut to fit panel)
SL–16 Roof Panel
Moisture Barrier
(Not by MBCI)
5/8" Plywood Minimum
(Not by MBCI)