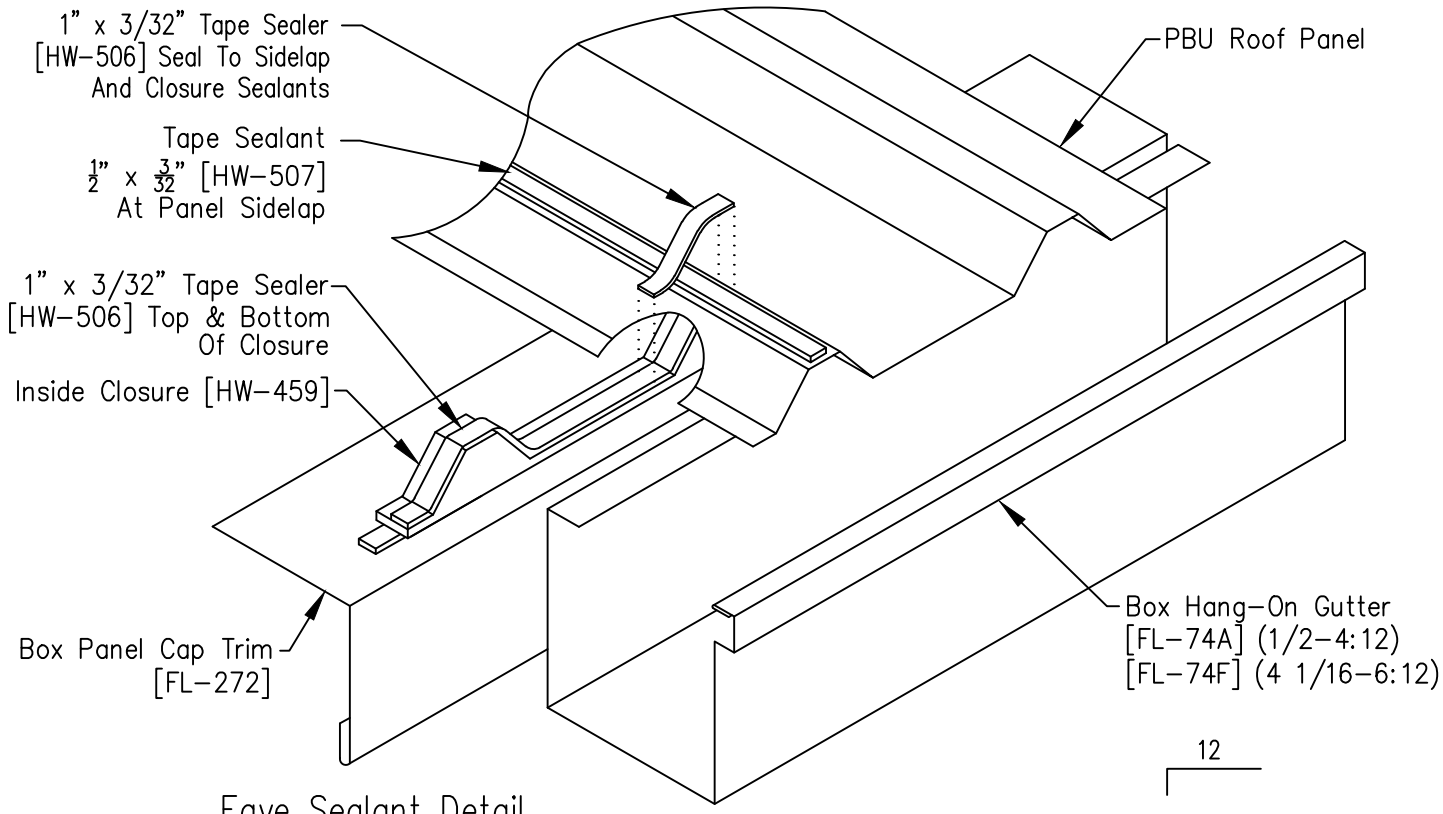
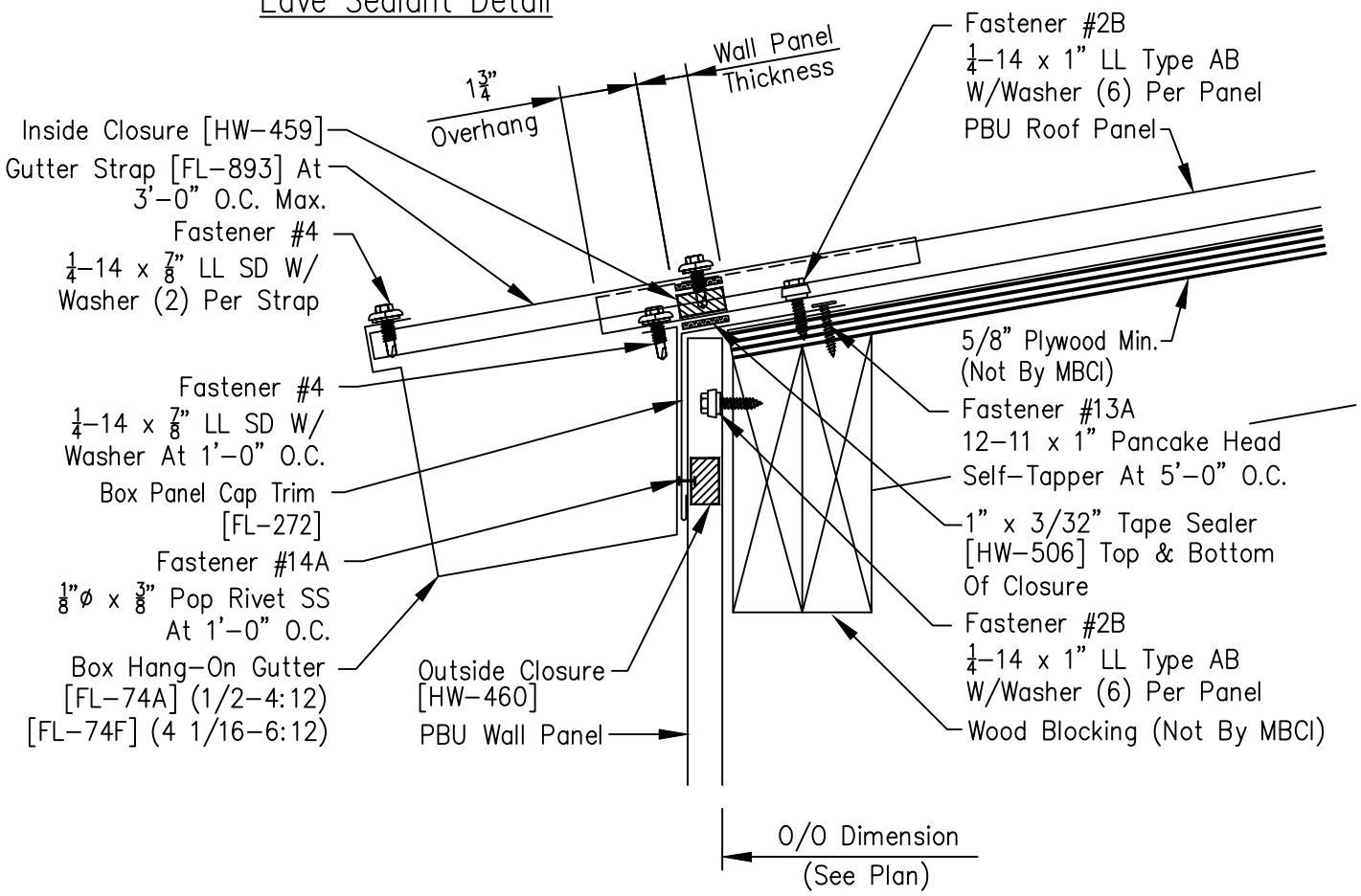
Eave Sealant Detail