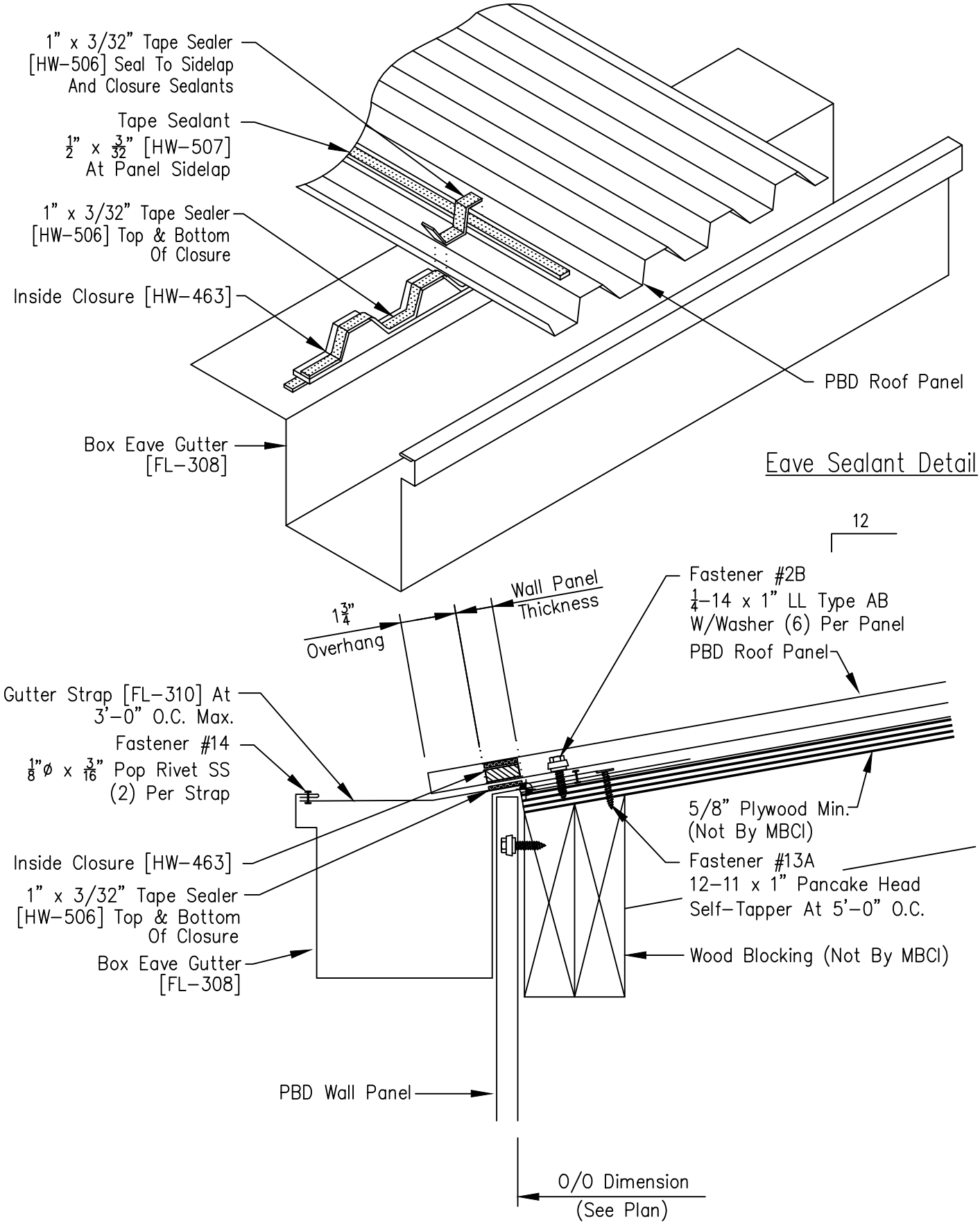
1" x 3/32" Tape Sealer [HW-506] Seal To Sidelap And Closure Sealants
Tape Sealant 1/2" x 3/32" [HW-507] At Panel Sidelap
1" x 3/32" Tape Sealer [HW-506] Top & Bottom Of Closure
Inside Closure [HW-463]
PBD Roof Panel
Box Eave Gutter [FL-308]
Eave Sealant Detail
12
Wall Panel Thickness
1 3/4" Overhang
Fastener #2B 1/4-14 x 1" LL Type AB W/Washer (6) Per Panel
PBD Roof Panel
Gutter Strap [FL-310] At 3'-0" O.C. Max.
Fastener #14 1/8"Ø x 3/16" Pop Rivet SS (2) Per Strap
5/8" Plywood Min. (Not By MBCI)
Inside Closure [HW-463]
Fastener #13A 12-11 x 1" Pancake Head Self-Tapper At 5'-0" O.C.
1" x 3/32" Tape Sealer [HW-506] Top & Bottom Of Closure
Box Eave Gutter [FL-308]
Wood Blocking (Not By MBCI)
PBD Wall Panel
O/O Dimension (See Plan)