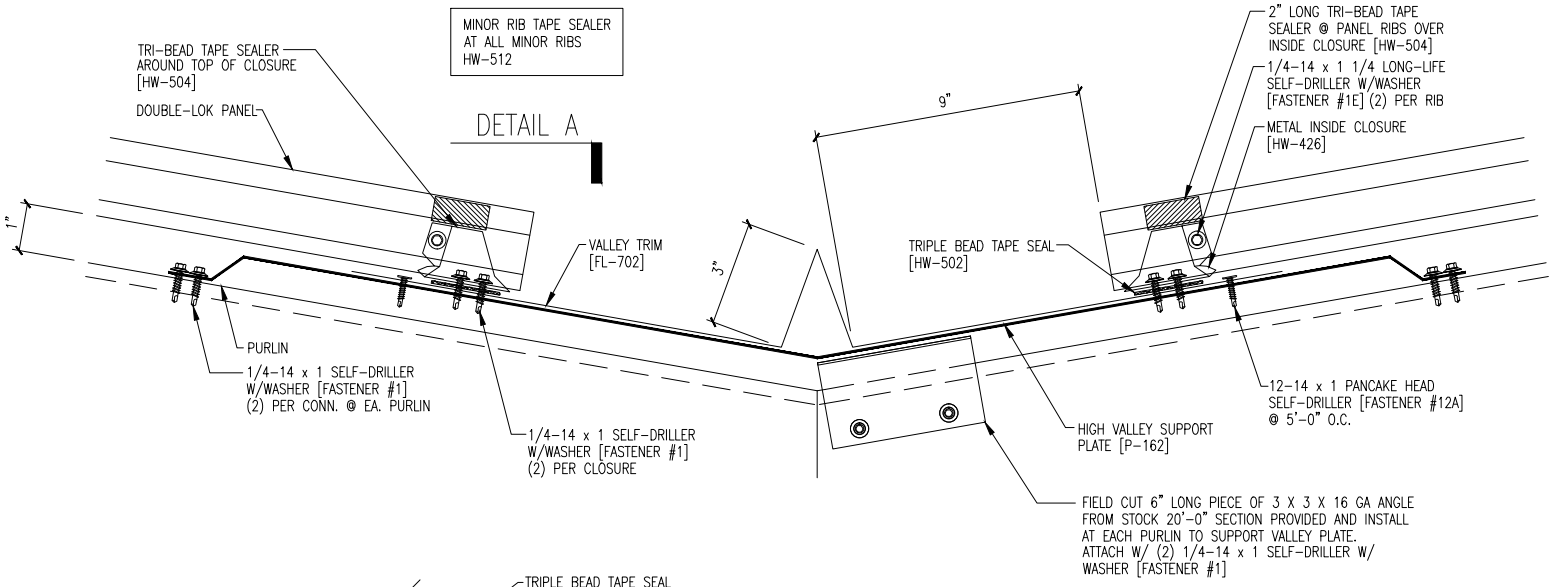

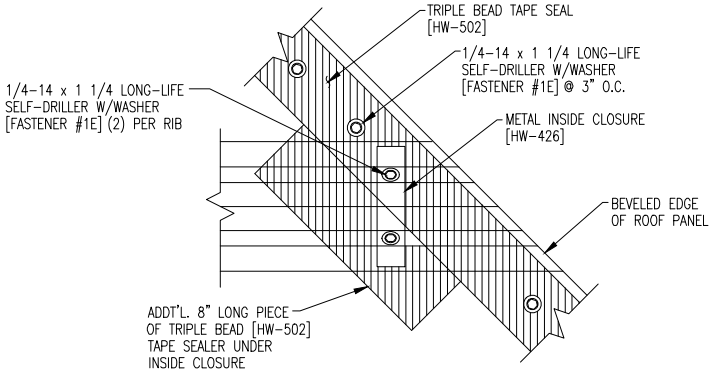

DETAIL "A"

NOTE:
REFERENCE TYPICAL TRIM
LAP SECTIONS

NOTE:
DETAIL TO BE USED WITH HIGH SLIDING SYSTEM
WHEN 1" TALL EAVE PLATE IS USED AT THE EAVE