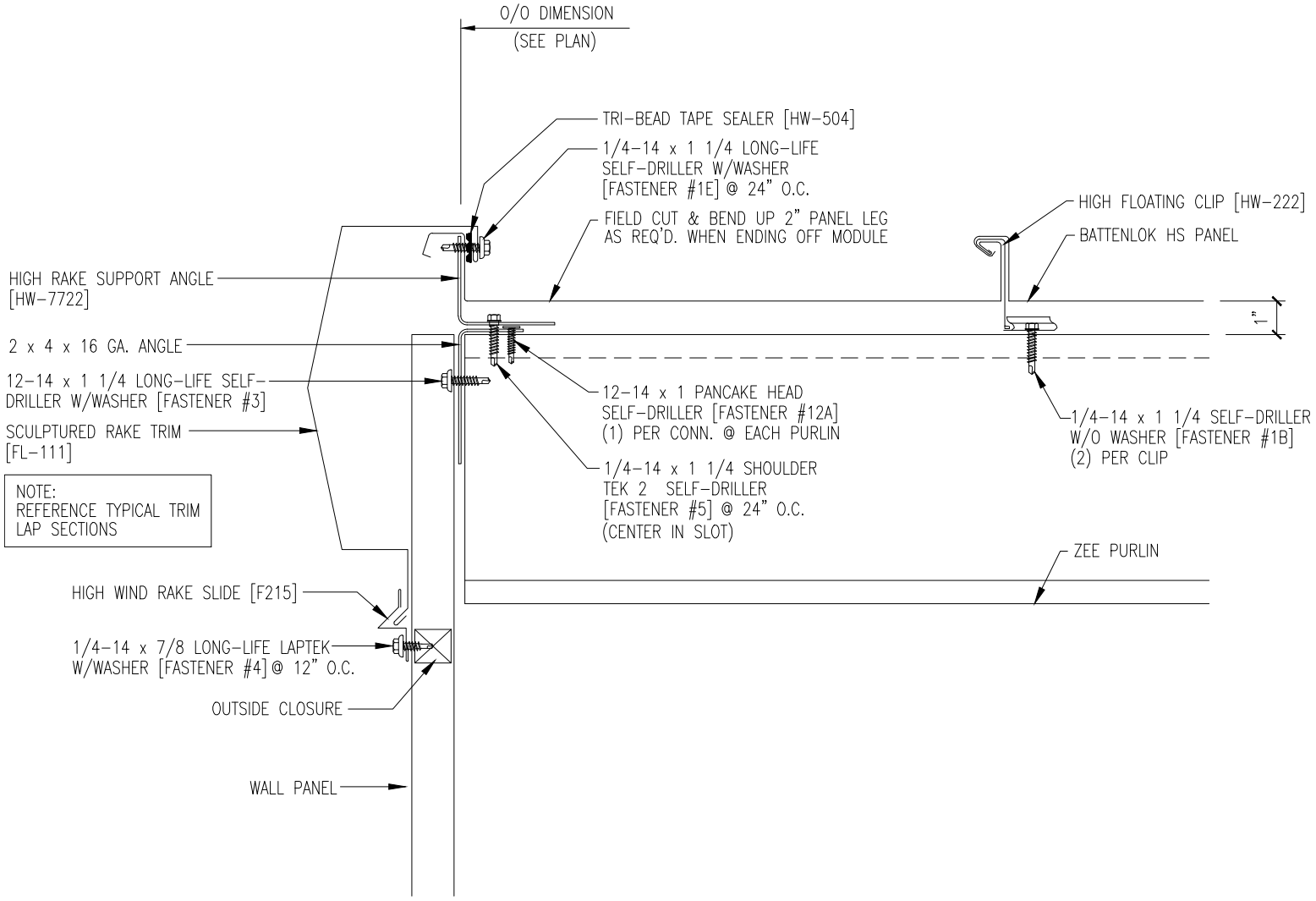
O/O DIMENSION
(SEE PLAN)
TRI-BEAD TAPE SEALER [HW-504]
1/4-14 x 1 1/4 LONG-LIFE
SELF-DRILLER W/WASHER
[FASTENER #1E] @ 24" O.C.
FIELD CUT & BEND UP 2" PANEL LEG
AS REQ'D. WHEN ENDING OFF MODULE
HIGH FLOATING CLIP [HW-222]
BATTENLOK HS PANEL
HIGH RAKE SUPPORT ANGLE
[HW-7722]
1"
2 x 4 x 16 GA. ANGLE
12-14 x 1 1/4 LONG-LIFE SELF-
DRILLER W/WASHER [FASTENER #3]
SCULPTURED RAKE TRIM
[FL-111]
12-14 x 1 PANCAKE HEAD
SELF-DRILLER [FASTENER #12A]
(1) PER CONN. @ EACH PURLIN
1/4-14 x 1 1/4 SELF-DRILLER
W/O WASHER [FASTENER #1B]
(2) PER CLIP
NOTE:
REFERENCE TYPICAL TRIM
LAP SECTIONS
1/4-14 x 1 1/4 SHOULDER
TEK 2 SELF-DRILLER
[FASTENER #5] @ 24" O.C.
(CENTER IN SLOT)
ZEE PURLIN
HIGH WIND RAKE SLIDE [F215]
1/4-14 x 7/8 LONG-LIFE LAPTEK
W/WASHER [FASTENER #4] @ 12" O.C.
OUTSIDE CLOSURE
WALL PANEL