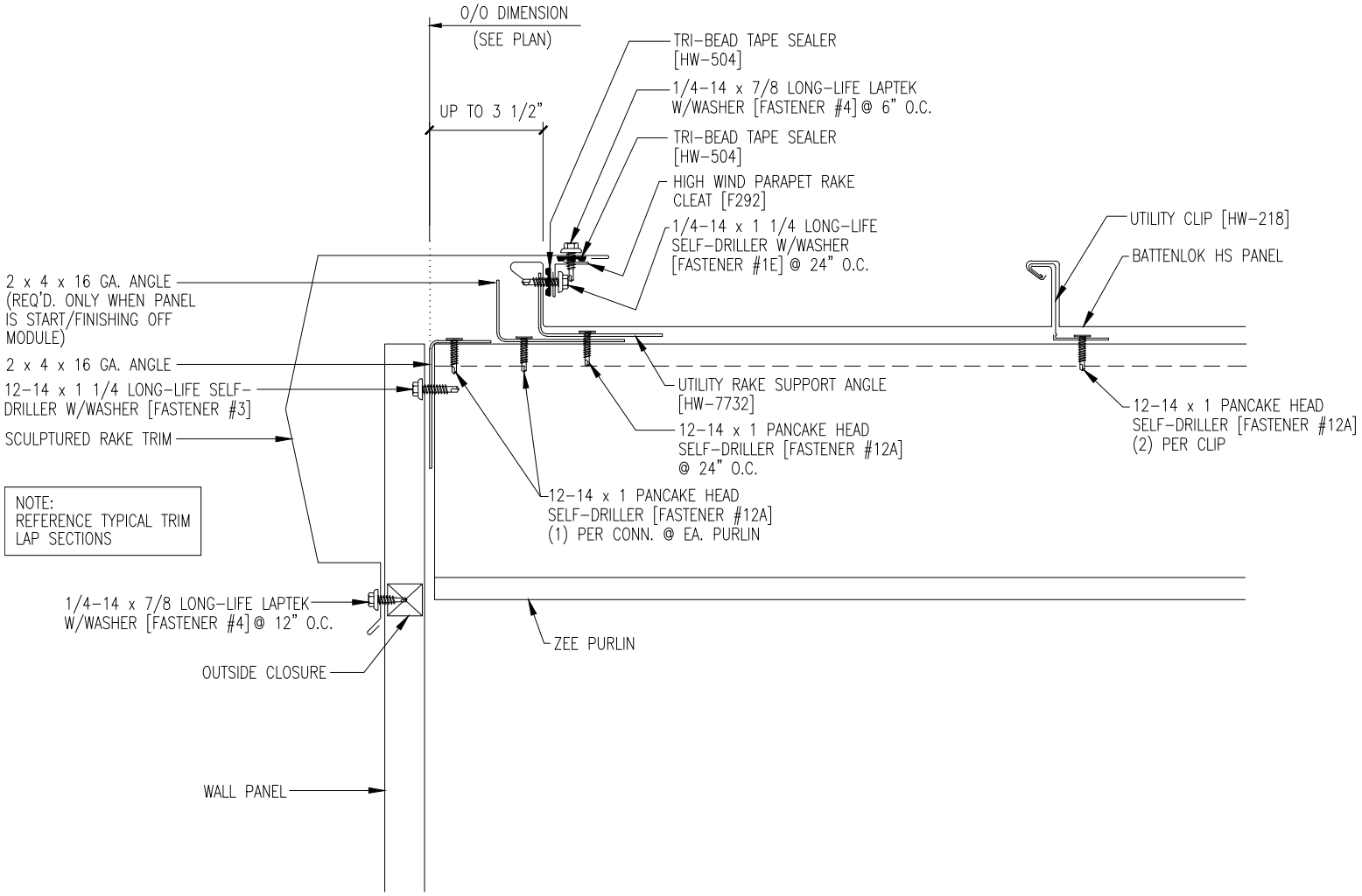
O/O DIMENSION
(SEE PLAN)
UP TO 3 1/2"
TRI-BEAD TAPE SEALER
[HW-504]
1/4-14 x 7/8 LONG-LIFE LAPTEK
W/WASHER [FASTENER #4] @ 6" O.C.
TRI-BEAD TAPE SEALER
[HW-504]
HIGH WIND PARAPET RAKE
CLEAT [F292]
1/4-14 x 1 1/4 LONG-LIFE
SELF-DRILLER W/WASHER
[FASTENER #1E] @ 24" O.C.
UTILITY CLIP [HW-218]
BATTENLOK HS PANEL
2 x 4 x 16 GA. ANGLE
(REQ'D. ONLY WHEN PANEL
IS START/FINISHING OFF
MODULE)
2 x 4 x 16 GA. ANGLE
12-14 x 1 1/4 LONG-LIFE SELF-
DRILLER W/WASHER [FASTENER #3]
SCULPTURED RAKE TRIM
UTILITY RAKE SUPPORT ANGLE
[HW-7732]
12-14 x 1 PANCAKE HEAD
SELF-DRILLER [FASTENER #12A]
@ 24" O.C.
12-14 x 1 PANCAKE HEAD
SELF-DRILLER [FASTENER #12A]
(2) PER CLIP
NOTE:
REFERENCE TYPICAL TRIM
LAP SECTIONS
12-14 x 1 PANCAKE HEAD
SELF-DRILLER [FASTENER #12A]
(1) PER CONN. @ EA. PURLIN
1/4-14 x 7/8 LONG-LIFE LAPTEK
W/WASHER [FASTENER #4] @ 12" O.C.
ZEE PURLIN
OUTSIDE CLOSURE
WALL PANEL